COMPACT DISC PLAYER

DP-X9010

SERVICE MANUAL

KENWOOD

1989-2 PRINTED IN JAPAN
B51-3732-00 (O) 1566

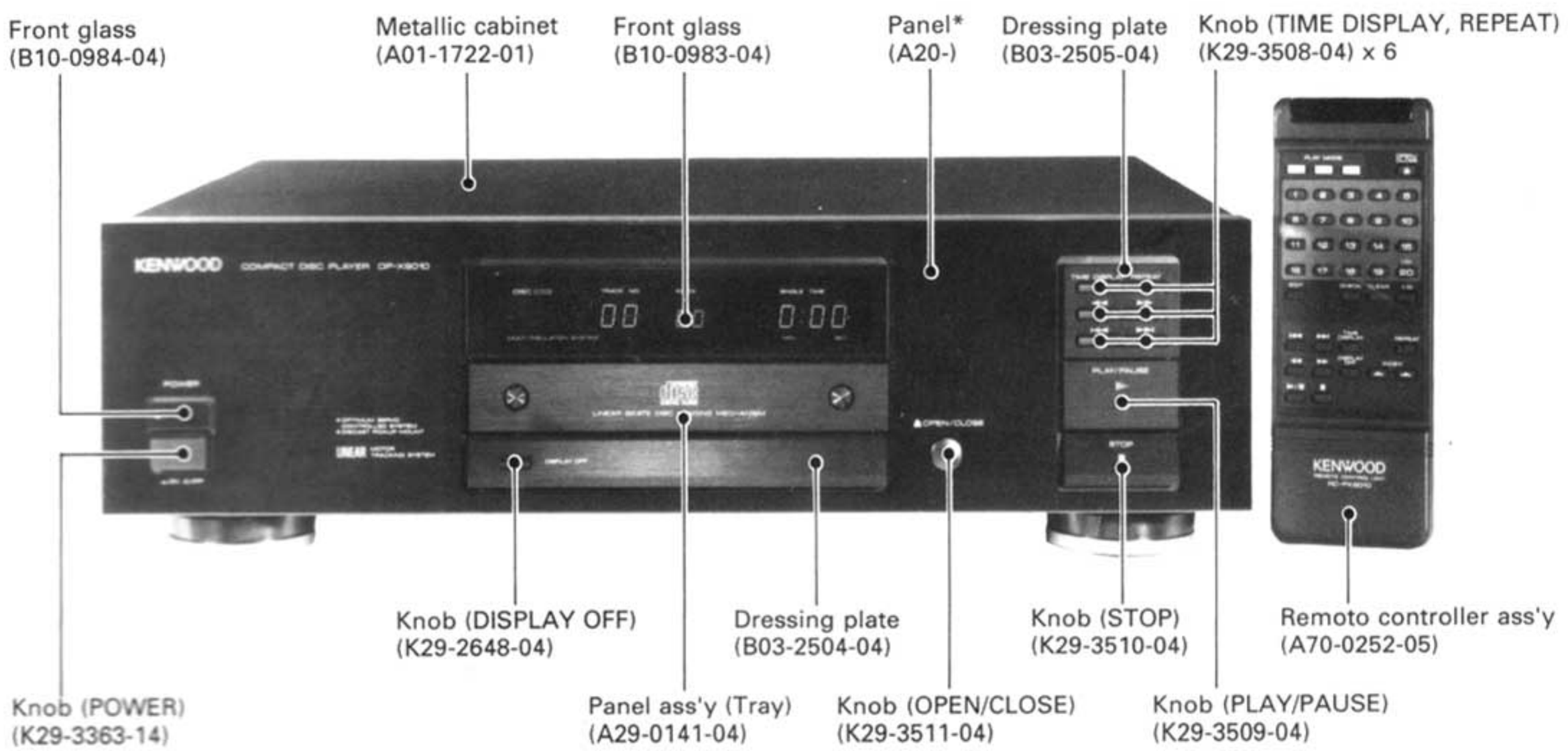

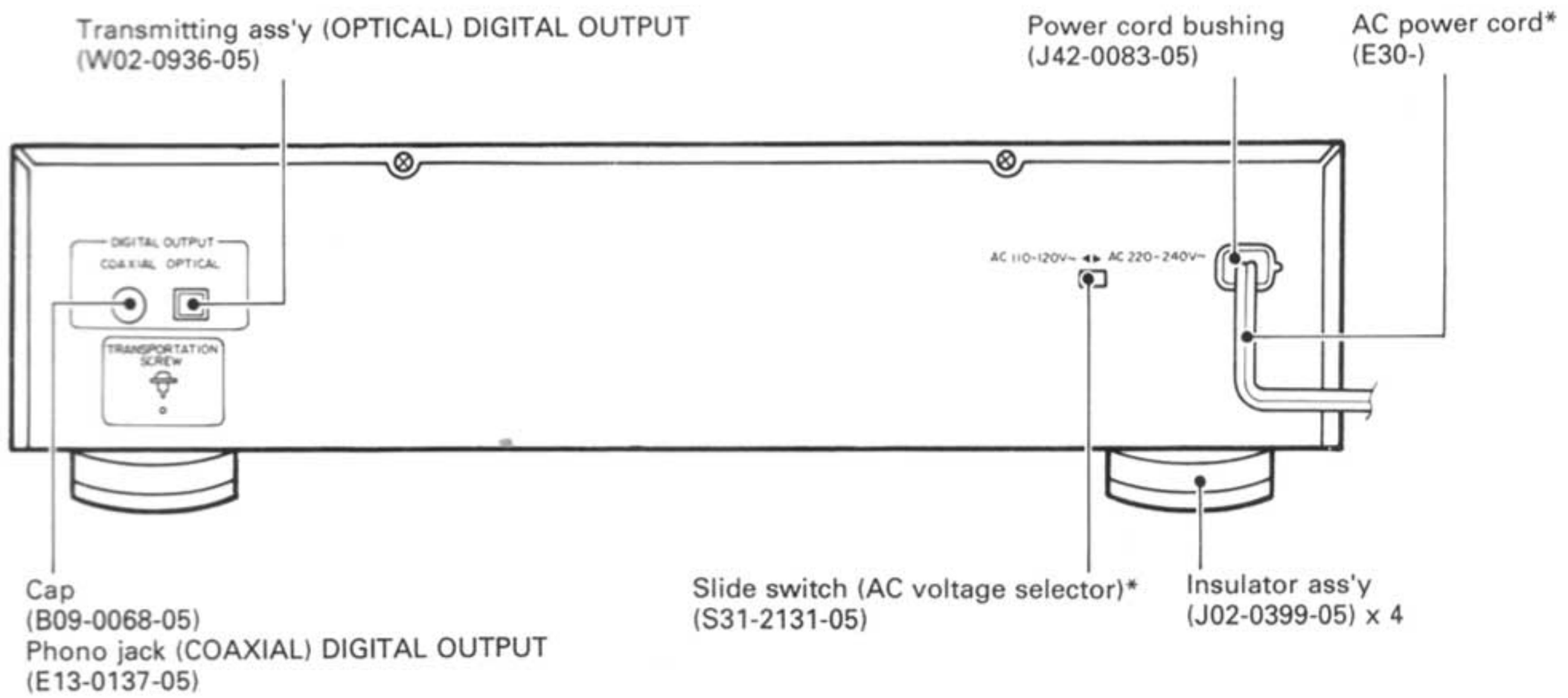

In complicance with Federal Regulations, following are reproductions of labels on, or inside the product relating to laser product safety.

KENWOOD-Corp. certifies this equipment conforms to DHHS Regulations No. 21 CFR 1040. 10, Chapter 1, Subchapter J.

DANGER : Laser radiation when open and interlock defeated. AVOID DIRECT EXPOSURE TO BEAM.

*** Refer to parts list on page 59.**

CONTENTS/BEFORE OPERATION

Contents

BEFORE OPERATION 2
CONTROLS AND INDICATORS 3
SYSTEM CONNECTIONS 4
DISASSEMBLY FOR REPAIR
1. Removing the mechanism 6
2. Removing the front panel and the boards.. 7
3. Replacement procedure of laser pickup 8
4. Replacement procedure of yoke ass'y 10
5. Removing the sub chassis and the insulators 11
6. Replacing the disc motor 11
7. Removal and replacement procedure of tray ass'y 12
BLOCK DIAGRAM 13
CIRCUIT DESCRIPTION
1. Description of components 15
2. CD player unit (X32-1310-00) 17
3. Set mode flowchart 18
4. Test mode 19
5. Microprocessor μPD75212ACW-051 (X32-1310-00 : IC14) 24
6. RF AMP. CXA1081S (X29-1960-00 : IC1) 26
7. Servo control CXA1244S (X32-1310-00 : IC8) 28
8. Signal processor CXD1125QZ (X32-1310-00 : IC10) 31
MECHANISM OPERATION DESCRIPTION 34
1. Tray OPEN operation 35
ADJUSTMENT 39
REGLAGE 40
ABGLEICH 41
PC BOARD (COMPONENT SIDE VIEW) 45
PC BOARD (FOIL SIDE VIEW) 49
SCHEMATIC DIAGRAM 53
EXPLODED VIEW (MECHANISM) 57
EXPLODED VIEW (UNIT) 58
PARTS LIST 59
SPECIFICATIONS ..... BACK COVER

Befor operation

• Transportation screw

Before operation, remove the red-headed screw attached to the bottom of the unit used during transportation from the factory. Remove the screw using a coin or screwdriver, etc.

- After removing, retain the screw at the rear of the unit.
- When the unit is to be transported again, be sure to place the screw to its original position as indicated below.

1. Turn ON the power switch when no disc is loaded.

2. Wait a few seconds until the disc OUT indicator-comes "ON". Then turn "OFF" DISC OUT the power.

3. Firmly tighten the transportation screw.

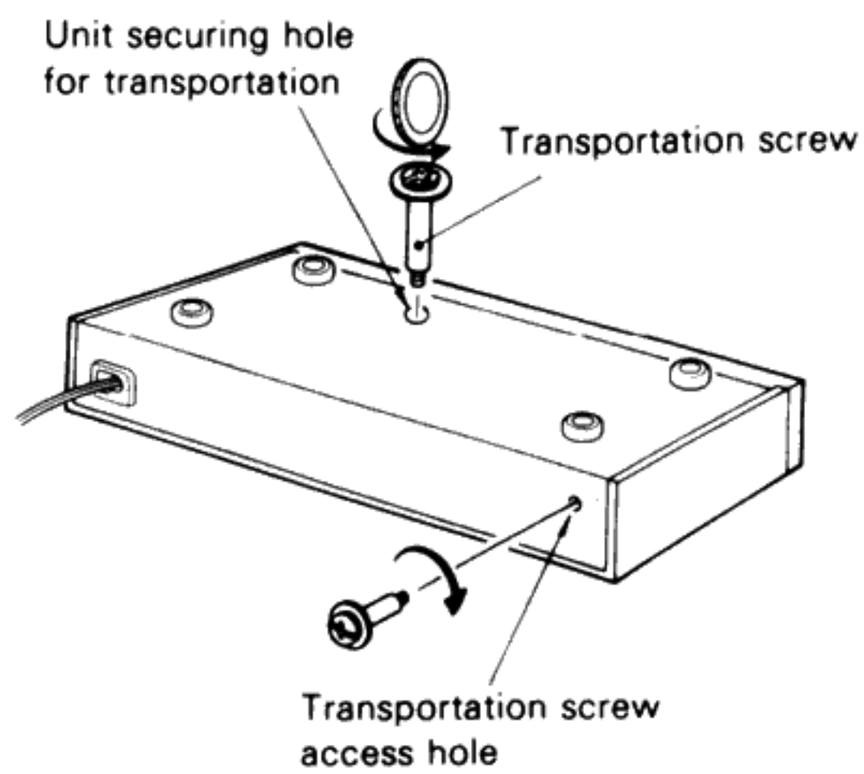

CONTROLS AND INDICATORS

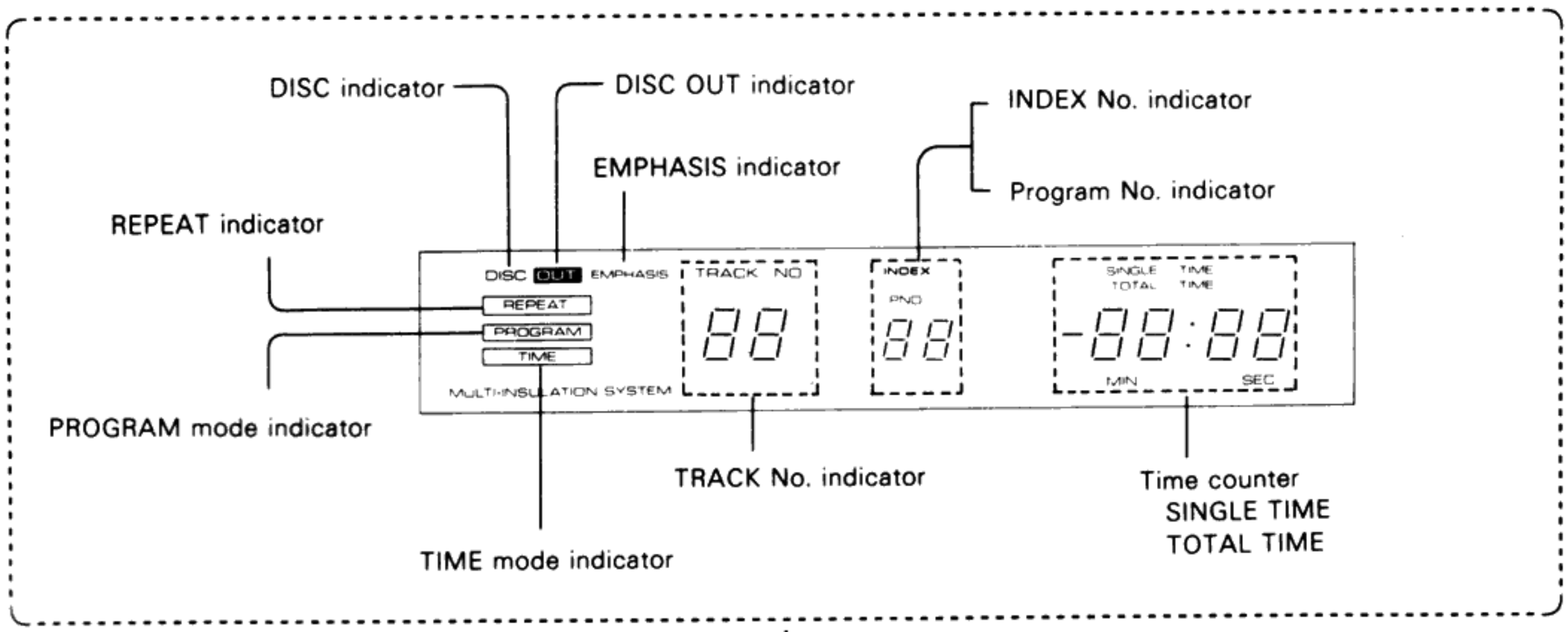

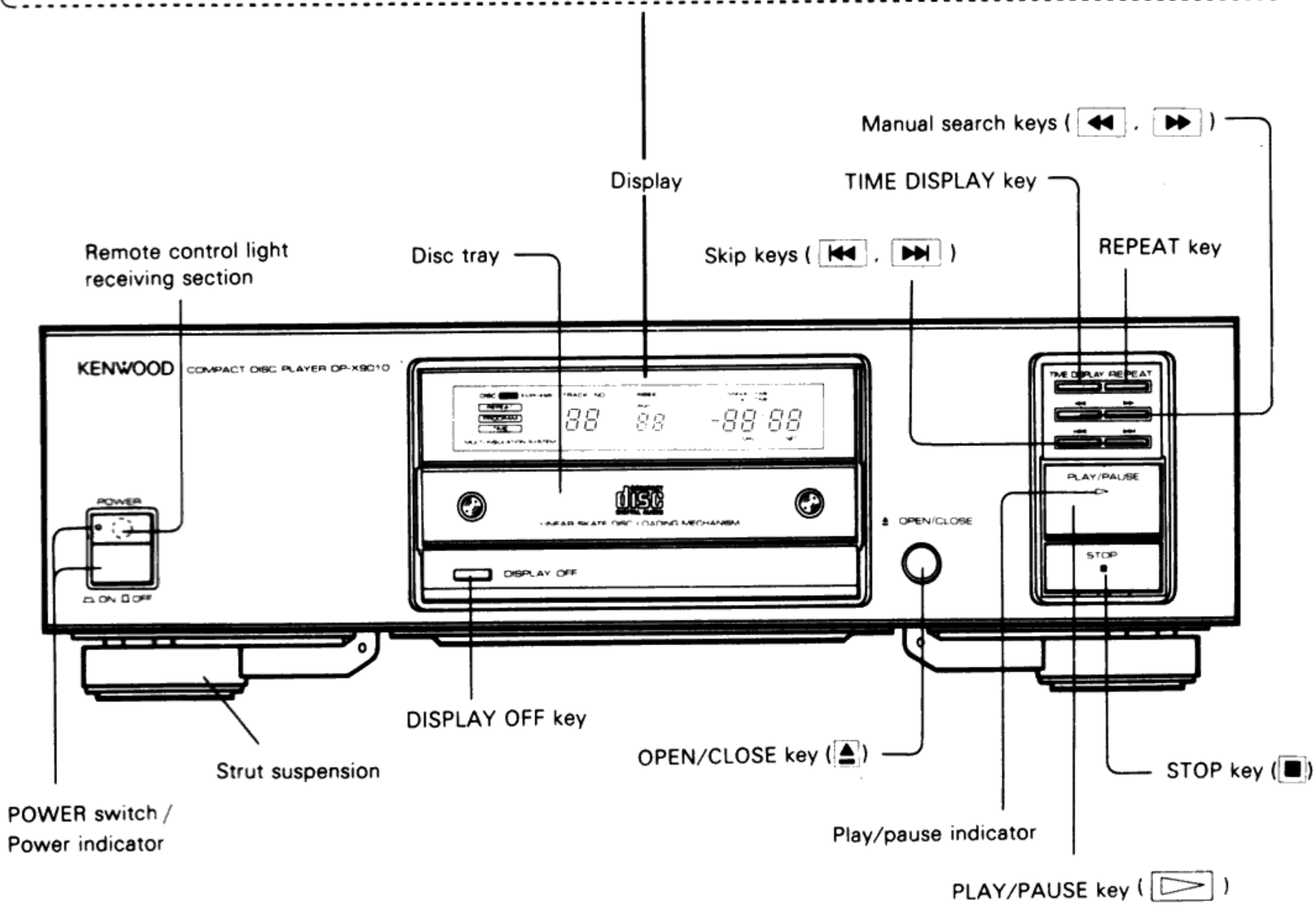

DISPLAY OFF key

Pressing this key turns off the display of the display section and play/pause indicator.
Pressing this key again or pressing other keys turns them back on.

SYSTEM CONNECTIONS

Do not put the plug into the socket until the connecting is completed.
Connect having selected either Ⓐ or Ⓑ below.
Connect this unit with an amplifier equipped with digital input.
Also refer to the manual for the amplifier to which the connection is to be made.

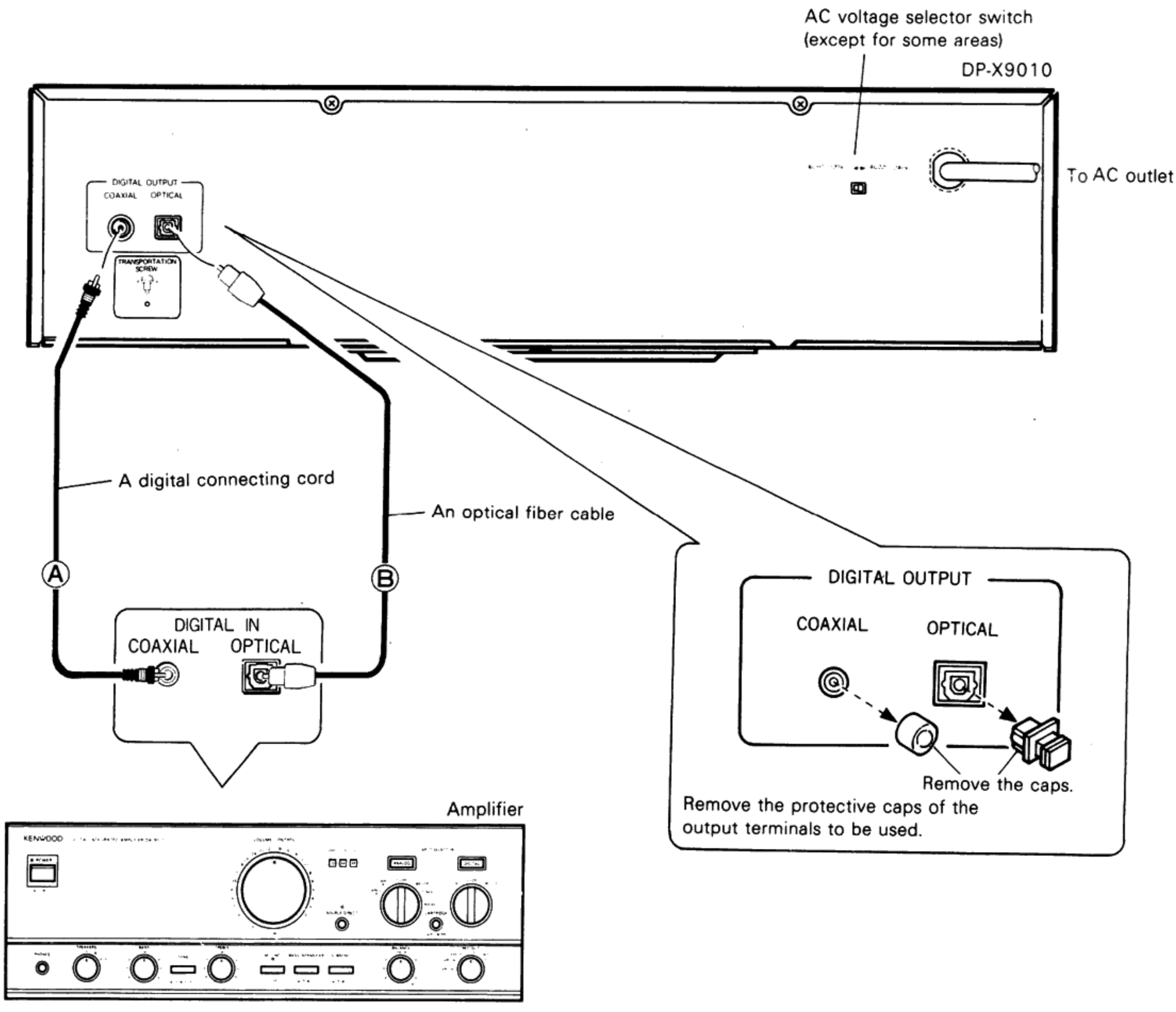

■ Connection to an amplifier (Ⓐ or Ⓑ)

Connect COAXIAL input terminal of the amplifier to the DIGITAL OUTPUT COAXIAL with a digital cord, or connect OPTICAL input terminal of the amplifier to the DIGITAL OUTPUT OPTICAL with an optical fiber cable.

DIGITAL OUTPUT COAXIAL (COAXIAL)

This terminal is for outputting the audio signals in the original digital code. Do not connect it to anything other than the digital input terminal of the amplifier because this could risk damaging the amplifier and speaker.

DIGITAL OUTPUT OPTICAL (OPTICAL)

This terminal is for converting and outputting the audio signals from digital to optical.
Connect it to the digital amplifier attached to the optical input terminal.

SYSTEM CONNECTIONS

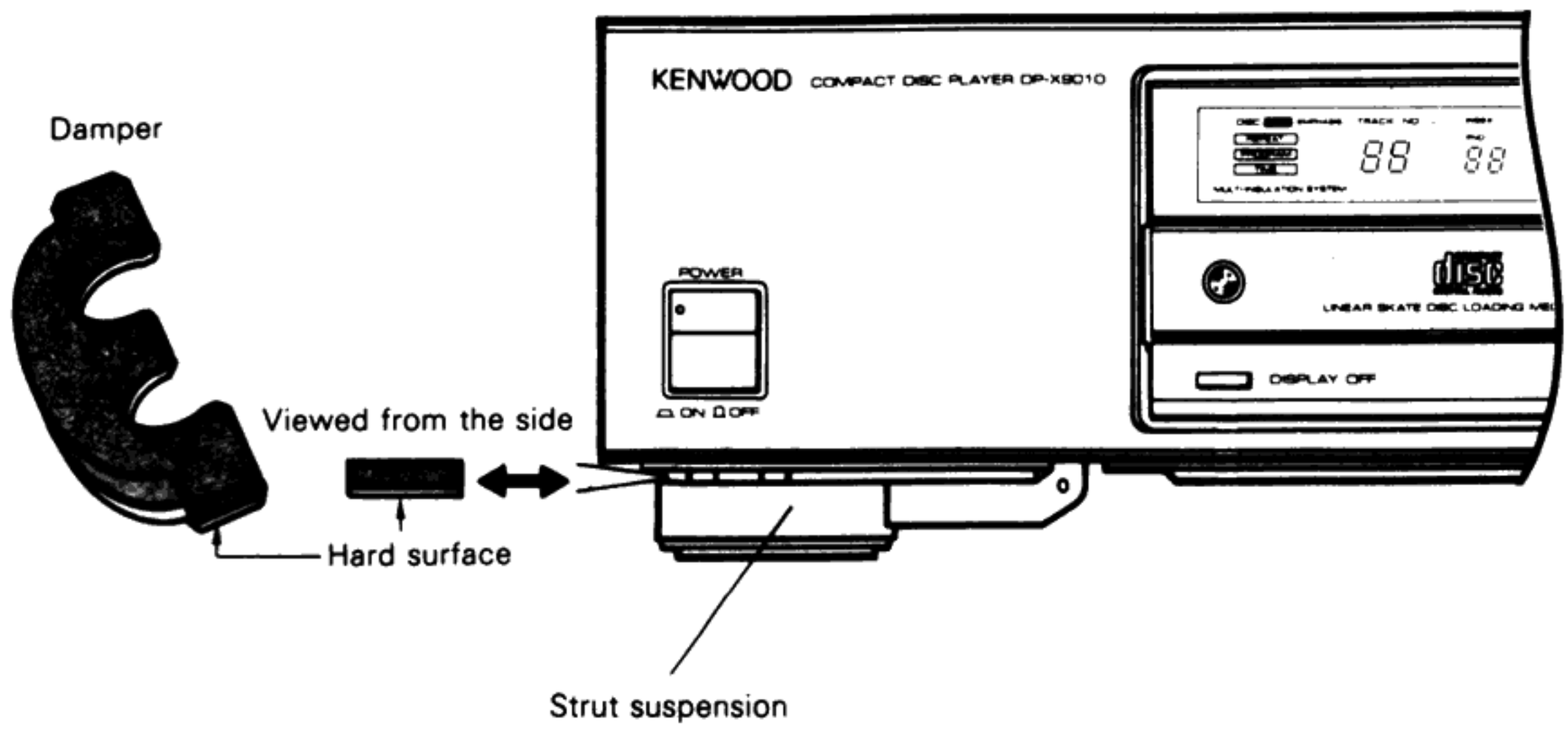

Strut suspension adjustment

Dampers are provided on the 4 lags of this unit for the strut suspension (see figure above). The suspension can be adjusted by attachment or removal of these dampers. Use them if you feel they are required for sound quality.

Turn the unit over when attaching or removing the dampers. We recommend that you do not place other components on top of this unit as it will impair the suspension effect.

■ Connecting optical fiber cable

1. When connecting the optical cable, insert it straight until you hear it click into place.

2. Never bend or tie the optical fiber cable.

An optical fiber cable

3. Not all optical cables available on the market can be used. If you cannot connect up, consult the store where you bought it from or your nearest sales outlet.

■ Connecting power cord

It is useful connect the power cord for this unit to the linking power socket (SWITCHED) of at amplifier (except for some areas).

DISASSEMBLY FOR REPAIR

1. Removing the mechanism

* Take out the case beforehand.

1. Rotate slowly the gear engaged with the DC motor (❶). More, when this gear is dull to rotate, rotate the worm force-fitted into the motor shaft.
2. Push slightly the left rear section of the tray by finger to let the tray out forwards (❷).
3. Remove the two screws (❸) of the tray panel and take out the tray panel.
4. Push back slowly the tray in the direction of an arrow (❹).

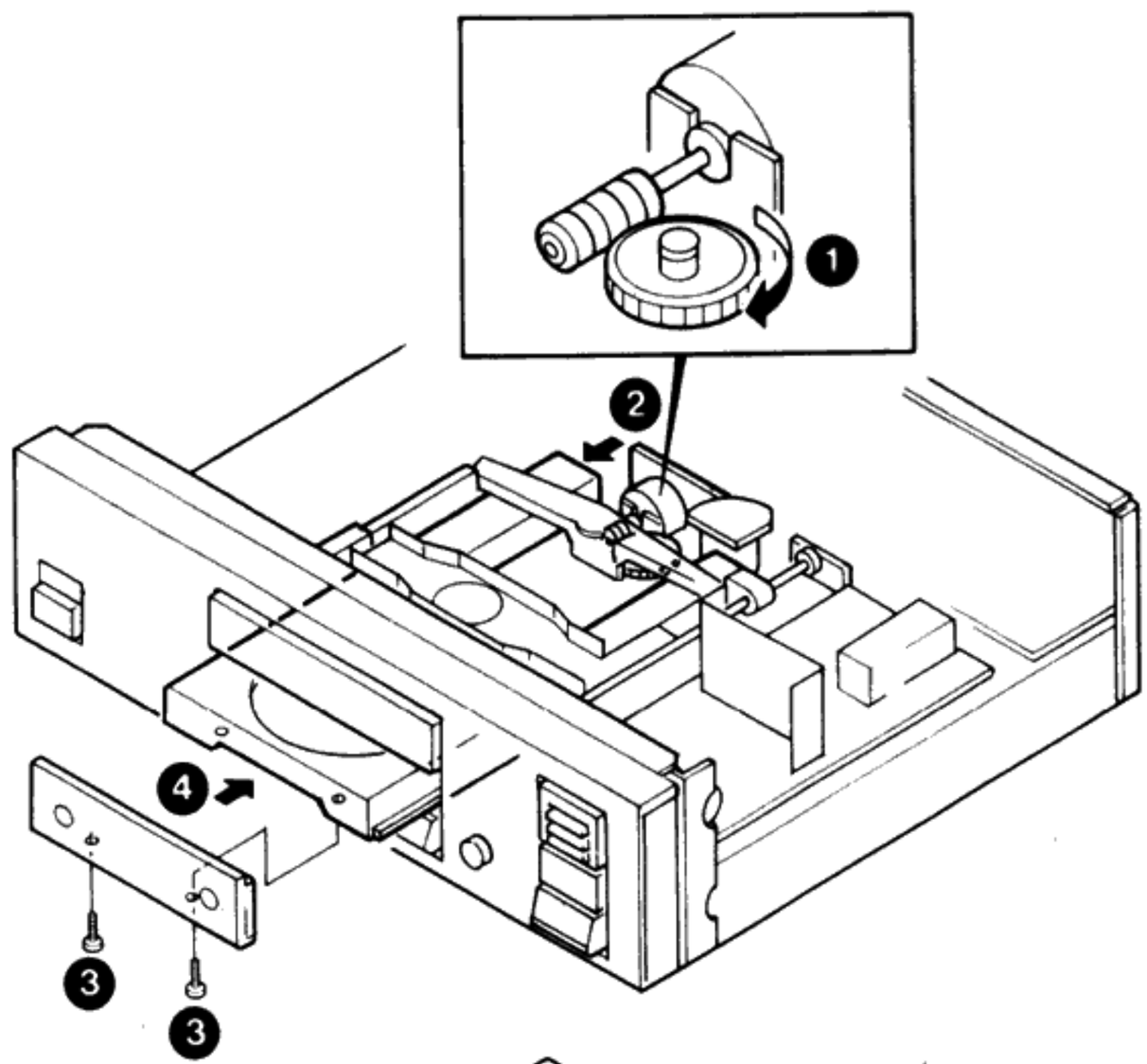

5. Disconnect the five connectors (❺).

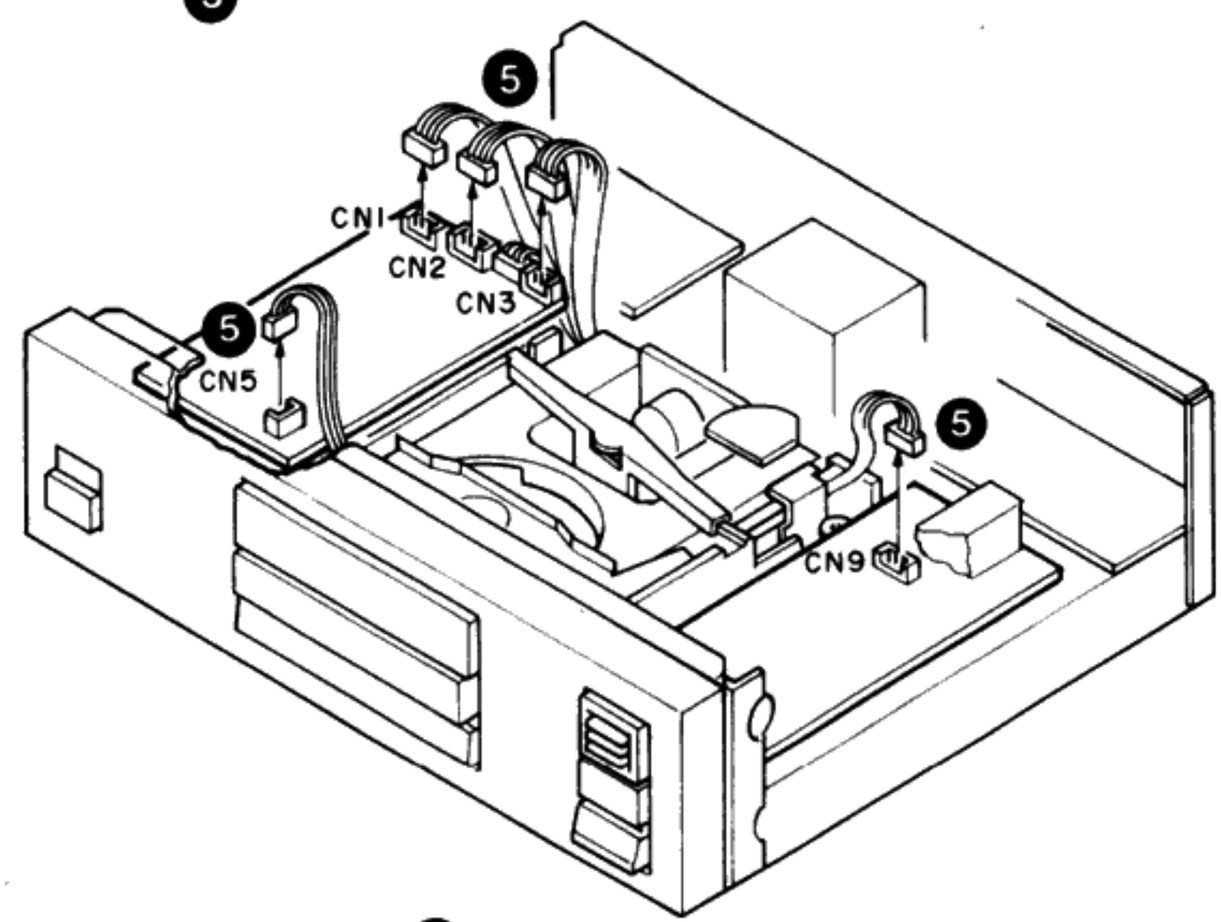

6. Remove the screw of the ground terminal (❻).
7. Remove the four screws (❼) fixing the mechanism.
8. Lift up off the mechanism slowly in the direction of an arrow (❽).

Note: The pickup, unfixed, can move forwards and backwards.
Accordingly, be careful not to hit the objective lens, etc. by fingers. In addition, draw adequate attention not to hit the slanted line portion of the tray surface against the chassis, as this cause damage to the tray surface.

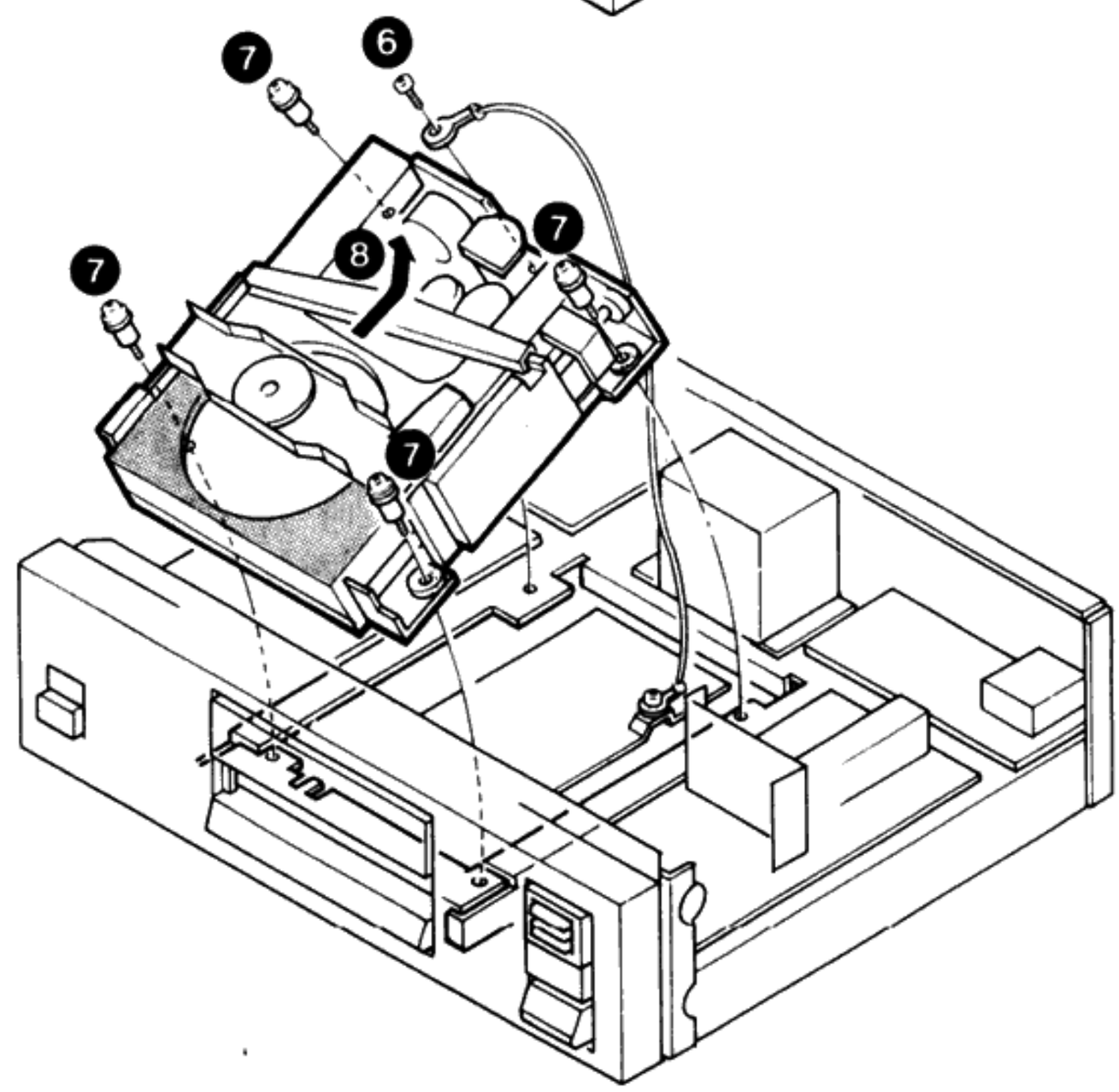

DISASSEMBLY FOR REPAIR

2. Removing the front panel and the boards

1. Remove the six screws (❶), upside and downside, of the front panel, and take out the front panel.
2. Remove the four screws (❷) of the subpanel.
3. Disconnect the flexible board from a connector (CN8) by pulling it off (❸).
4. Push down the hook lightly in the direction of an arrow (❹). After the hook is undone, take out the subpanel.

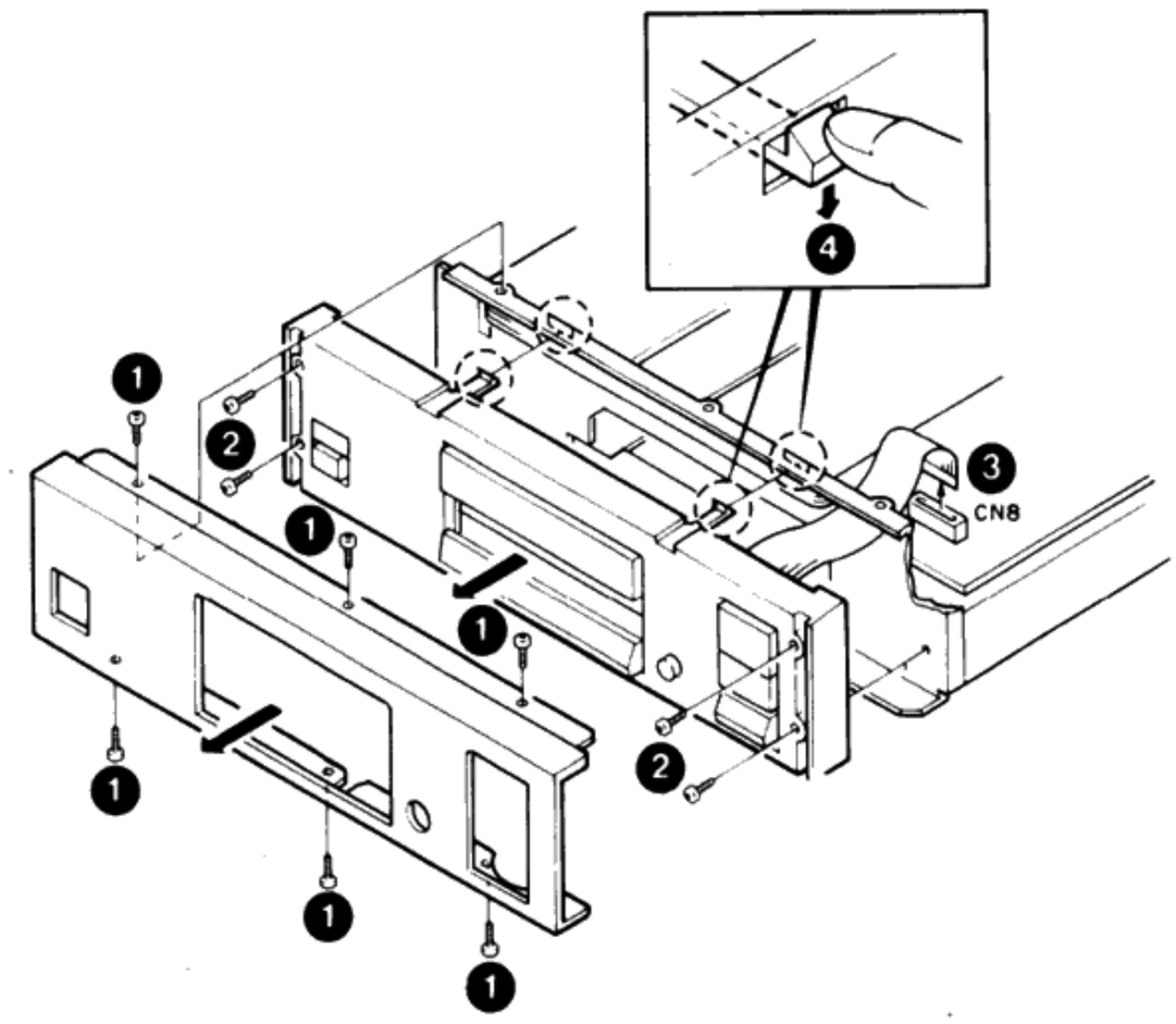

5. Remove the seven screws (❺) fixing the display board, etc. to the subpanel.
6. Undo the twelve hooks (❻) retaining the respective boards, and detach them.

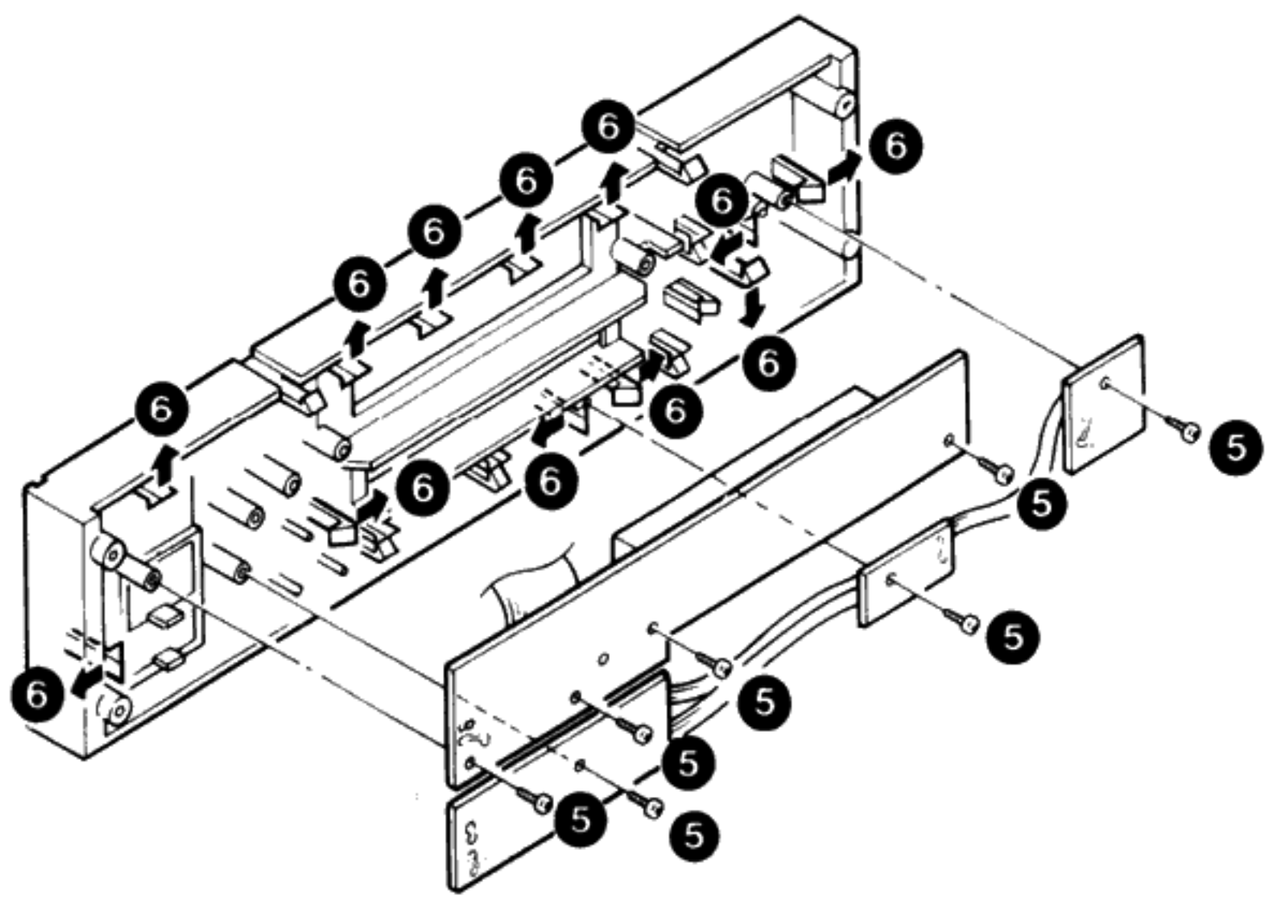

3. Replacement procedure of laser pickup

1. When checking or removing the laser pickup, first make a solder bridge on the short land provided to the side of the laser pickup.
   In addition, as to the new pickup, its flexible board is longer one step, and a solder bridge is made on an additional short land.

Note: When replacing the pickup, after its installation is completed, cut short the flexible board for use.

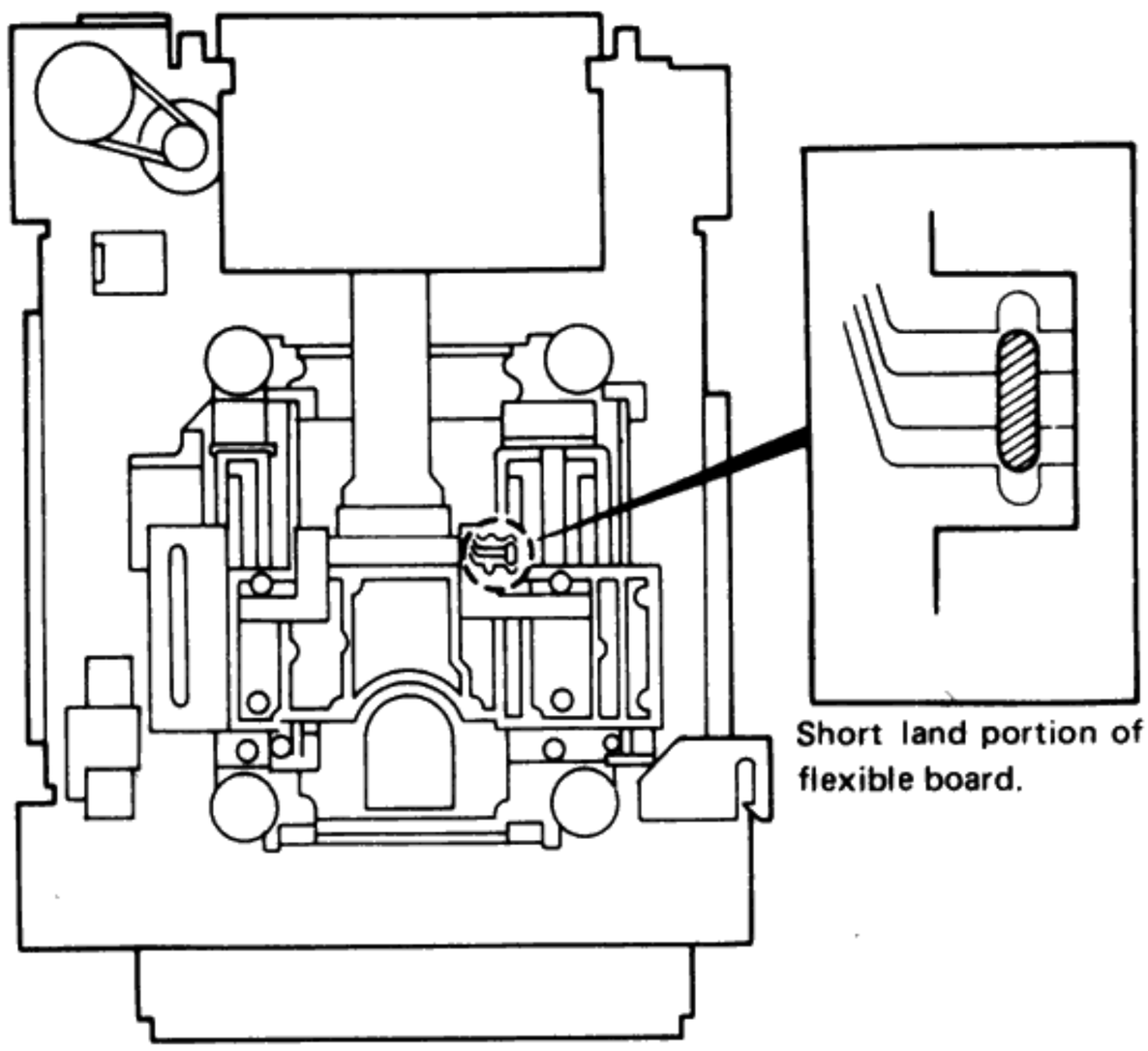

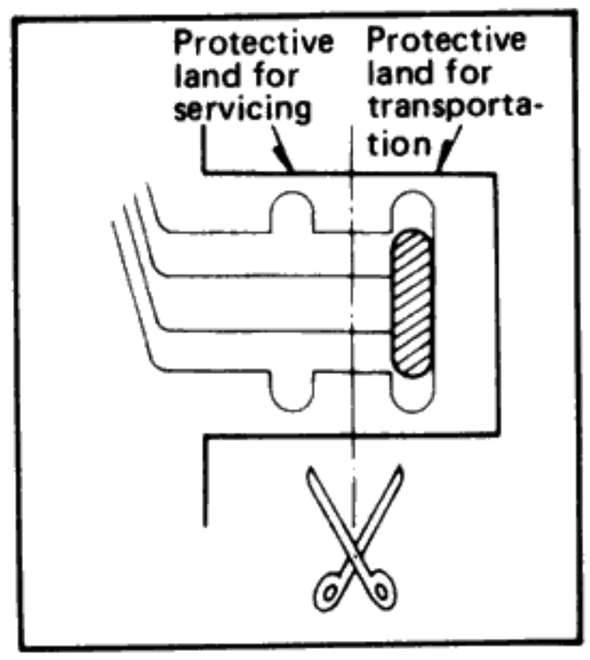

Diagram of flexible board as a service parts
* Following the installation of the new pickup, cut the board along the broken line for use.

2. Draw out the connection flexible board of the laser pickup in the direction of an arrow (❶).

Note: In the replacement work, cover the PC board with a cloth, etc. to protect your fingers, etc. from the soldering face of the RF unit.

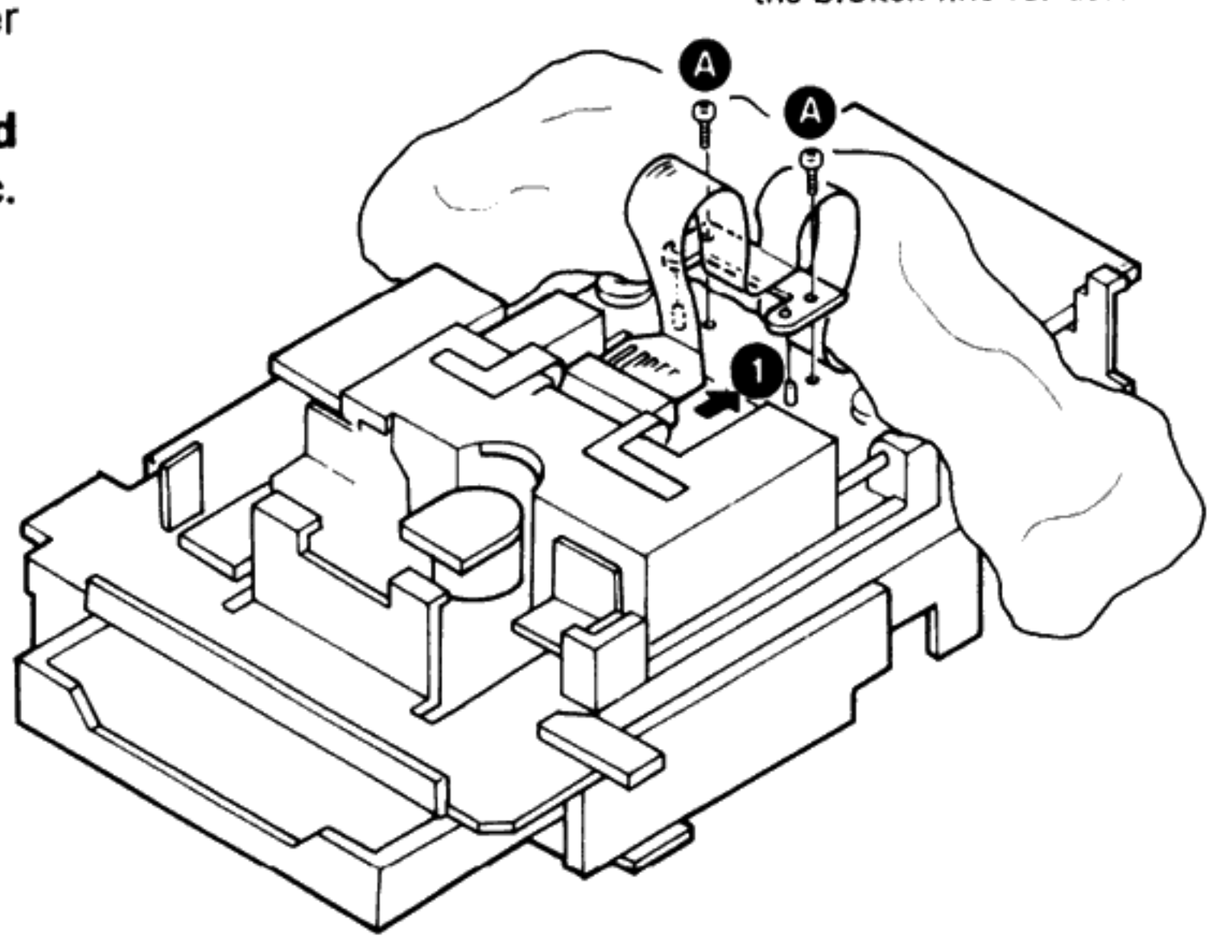

DISASSEMBLY FOR REPAIR

3. Subsequently, unsolder the flexible board and the yoke ass'y. As shown on the right, unsolder between the yoke ass'y pins and the flexible board thoroughly by a solder absorber (❷).

Note: When the reinforcement plate of the flexible board is slowly lifted up, the yoke ass'y pins should not be lifted up together.

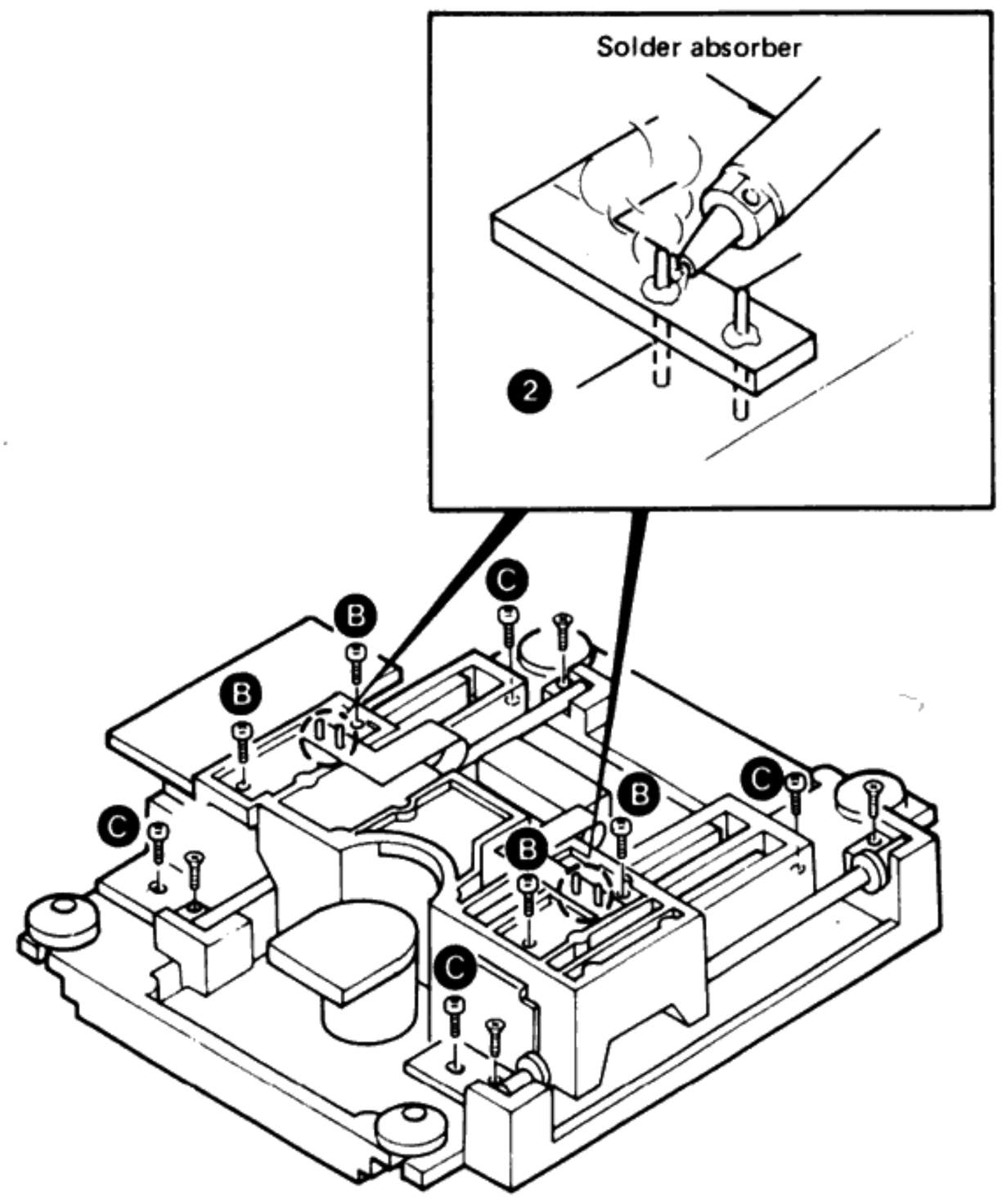

4. Remove the two push rivets (❸) fixing the flexible board of the pickup from the upper side of the mechanism.
5. Remove the four flat head screws ((❹)-1 to (❹)-4. fixing the laser pickup itself in numerical order, then pull up the laser pickup slowly.
6. Subsequently, draw out the laser pickup fixing rods (❺) slowly, then install the new pickup.
   Reversely to the removal at step 5., tighten the said screws (❹)-4 to (❹)-1 to secure the rods.

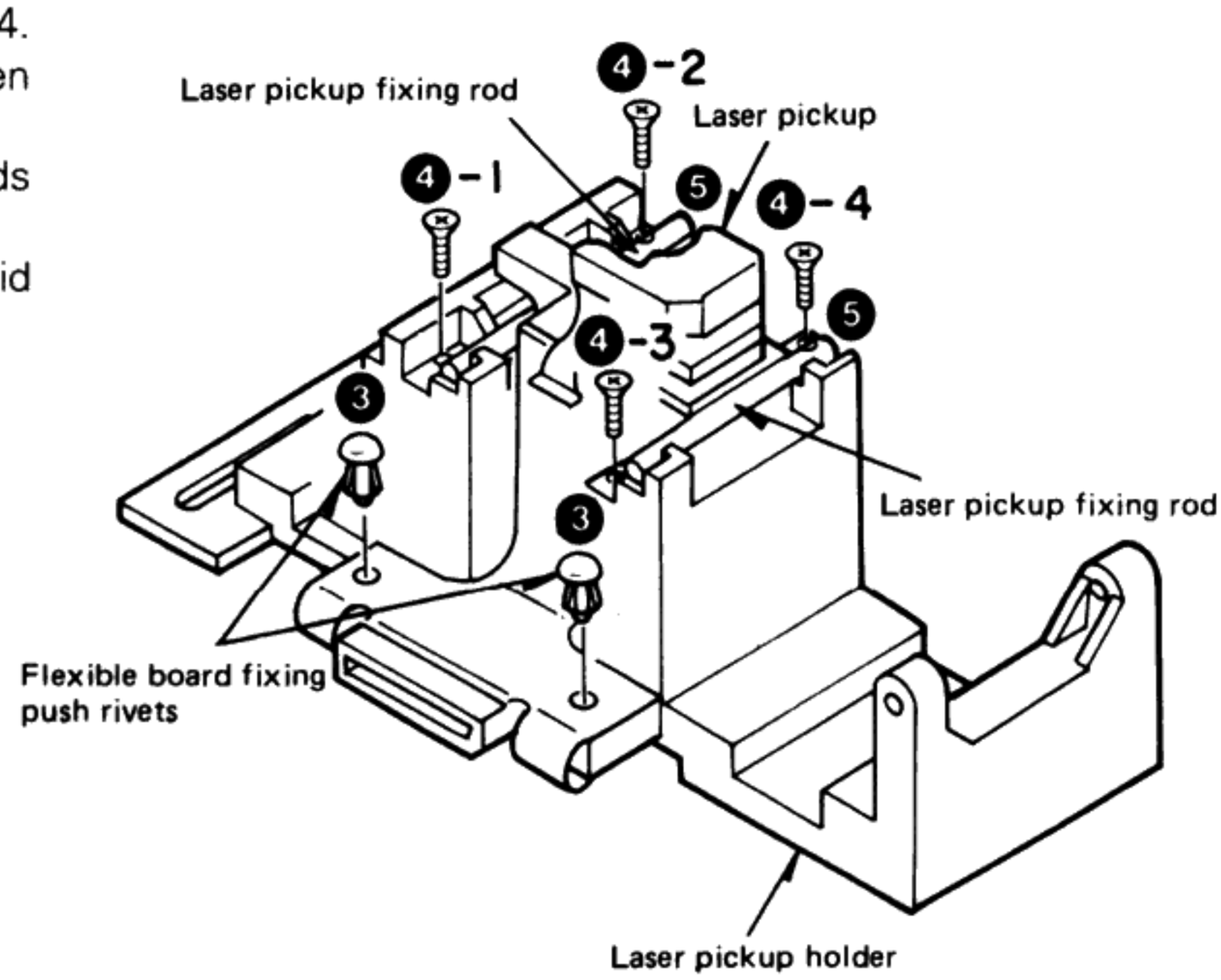

DISASSEMBLY FOR REPAIR

4. Replacement procedure of yoke ass'y

1. In the sequence exposed in "3. Replacement procedure of laser pickup", disconnect the flexible cord (❶).
2. As shown on the right, remove the two screws (Ⓐ) of the acryl plate fixing the flexible cord.

Note: In this case, be sure to make a solder bridge to prevent the static breakdown.

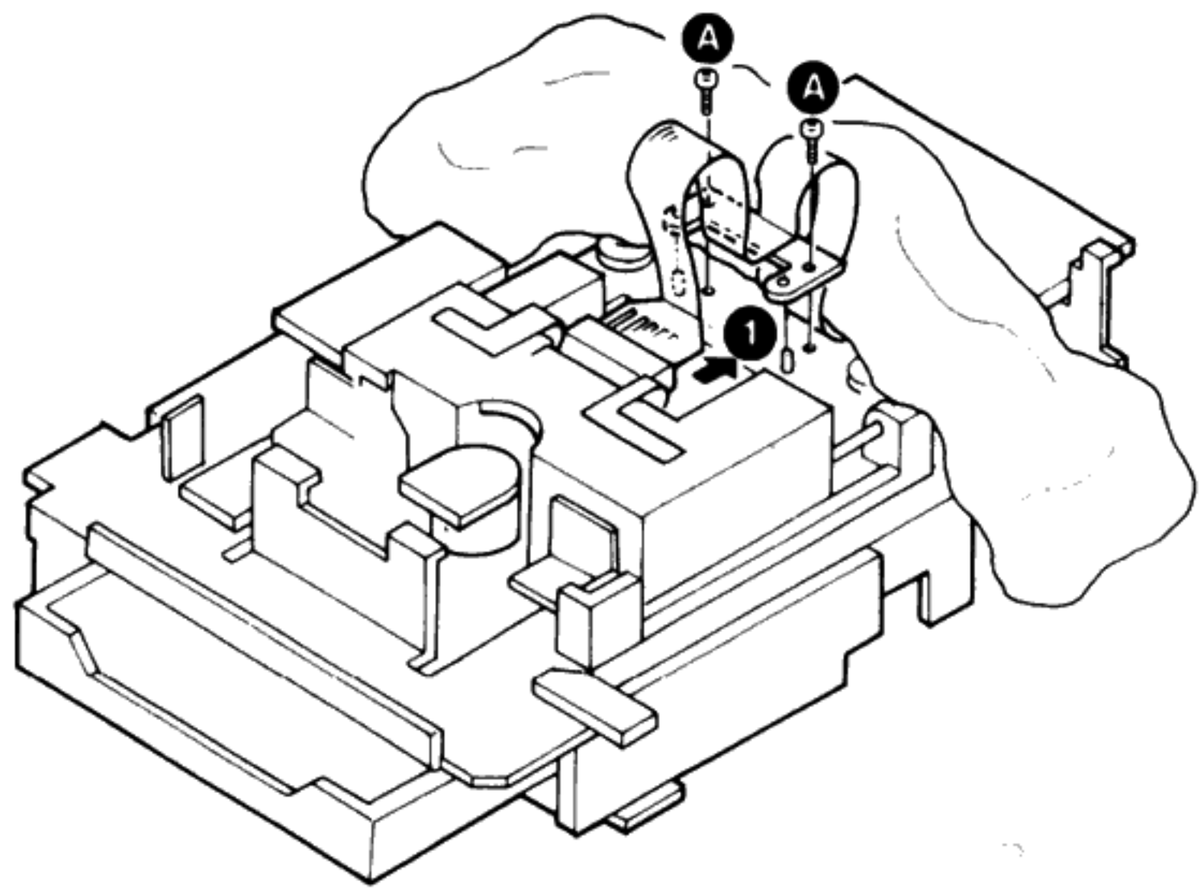

3. Unsolder thoroughly at four points the left and right yoke assi'es of the flexible board supplied as an accessory to the laser pickup by a solder absorber (❷).

Note: If any pin of yoke ass'y is heated for an extended period of time or is subject to the application of an excessive force, it may be broken or come off.

4. Remove the four screws (Ⓑ) fixing the laser pickup holder and yoke assi'es.
5. Remove the four screws (Ⓒ) at the sensor section yoke ass'y and drive section yoke ass'y.

Note: In each yoke ass'y, a coil magnet is incorporated. If disassembled, a load can be applied in the sliding action or unwanted matter (screw, lead cutting dusts, etc.) can adhere to the magnet.
Moreover, after completion of repair, also check whether or not unwanted matters such as screw, lead cutting dusts, etc. adhere to the magnet.

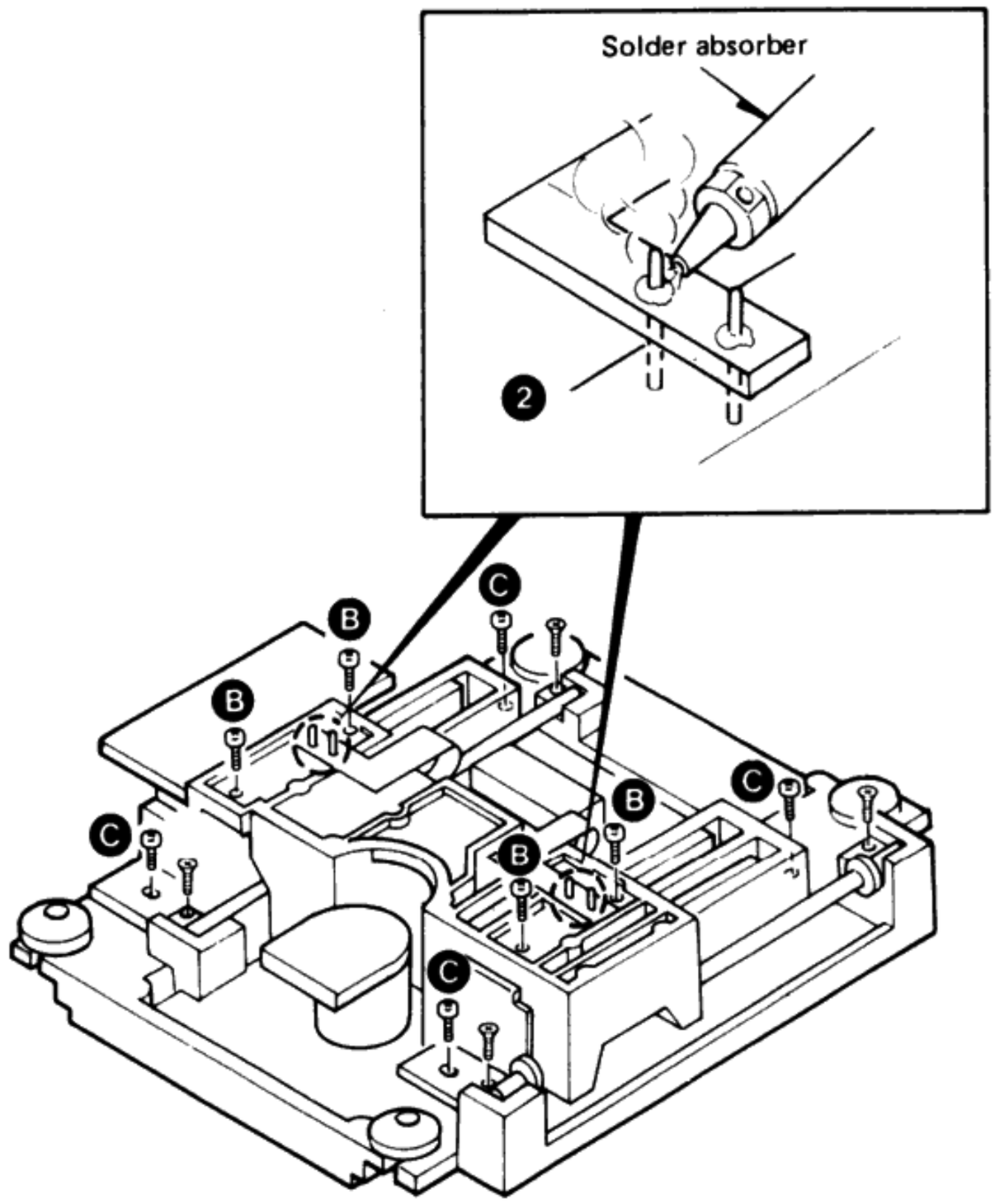

DISASSEMBLY FOR REPAIR

5. Removing the sub chassis and the insulators

1. As shown on the right, remove the four tapping screws (❶), and the laser pickup section will be detached together with the sub chassis ass'y to which it is installed.

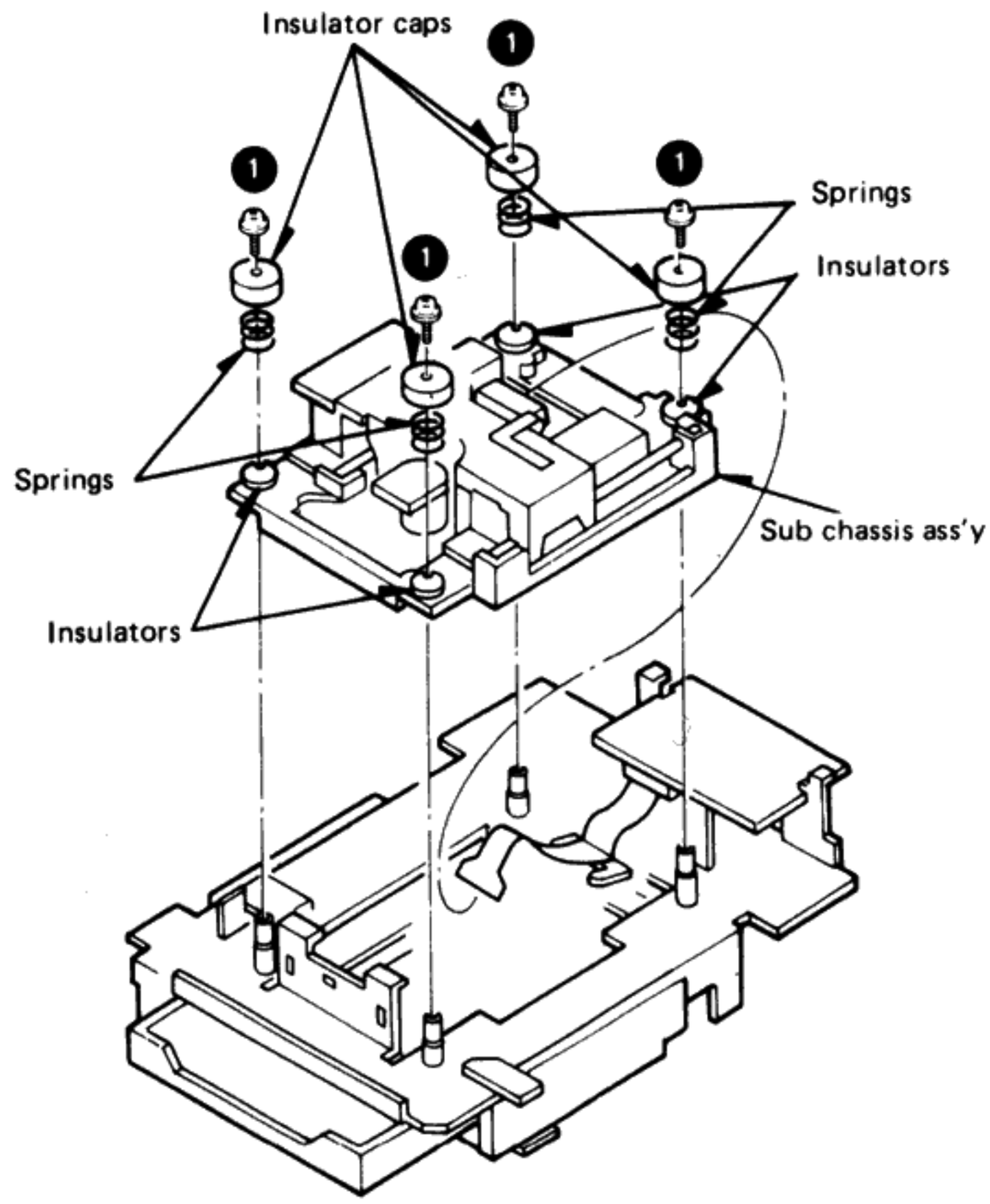

6. Replacing the disc motor

1. Remove the three screws (❶) fixing the sub chassis ass'y, then replace the disc motor ass'y.

Note: When installing the new disc motor, be sure to positively mount it in alignment with the two grooved portions of the sub chassis ass'y.

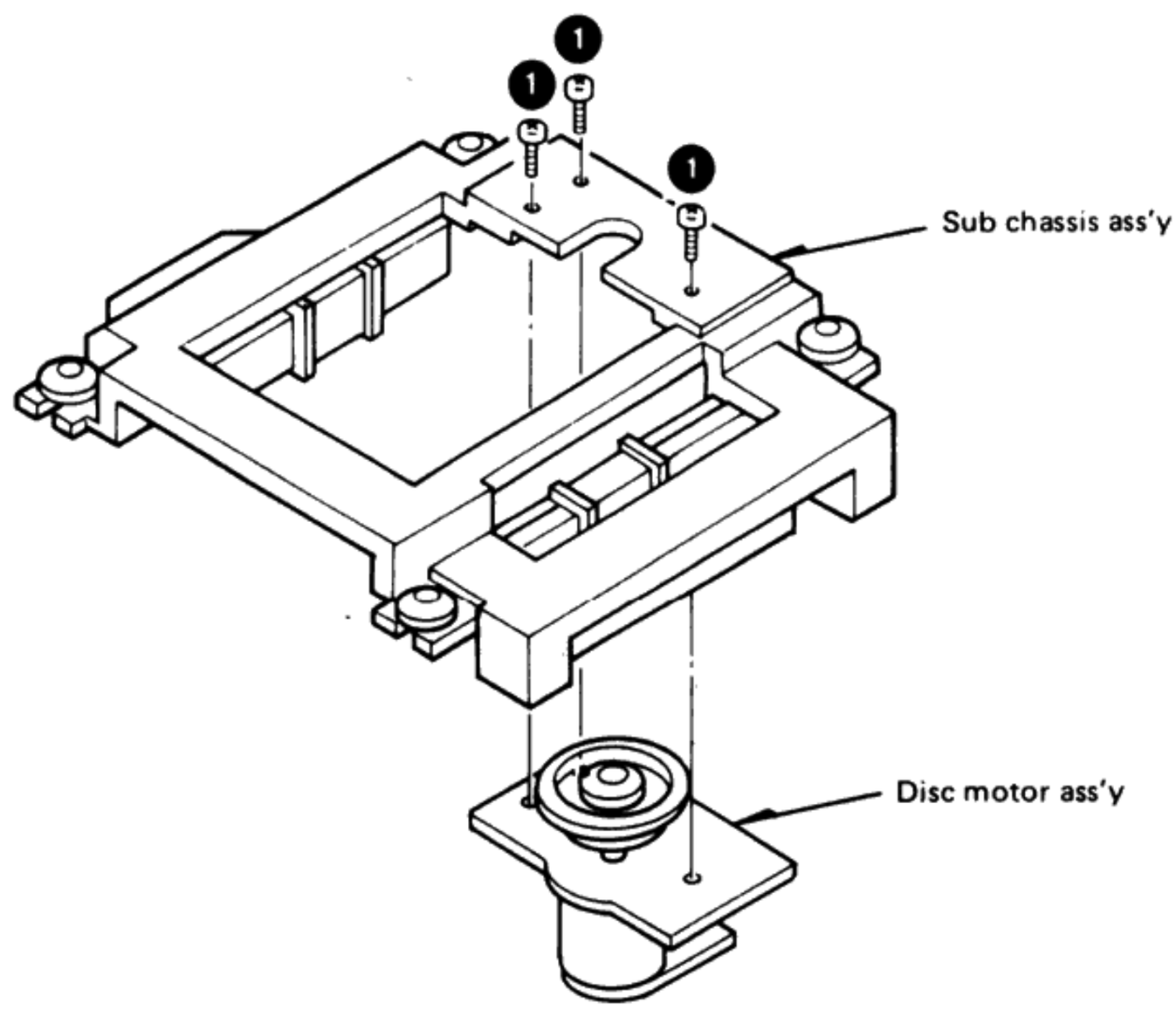

7. Removal and replacement procedure of tray ass'y

1. When drawing out the tray from the clamped state, rotate the gear slowly by finger in the direction of an arrow (❶) as shown on the right, and the tray will be released from the clamped state so that the tray can be opened.
2. Push the tray in the direction of an arrow (❷) from its rear and draw it out towards you.
3. Remove the two screws (❸) of the sliding section fixing the tray.
4. Put down the holder in the direction of an arrow (❹) and pull the tray in the direction of an arrow (❺), and the tray will be detached.

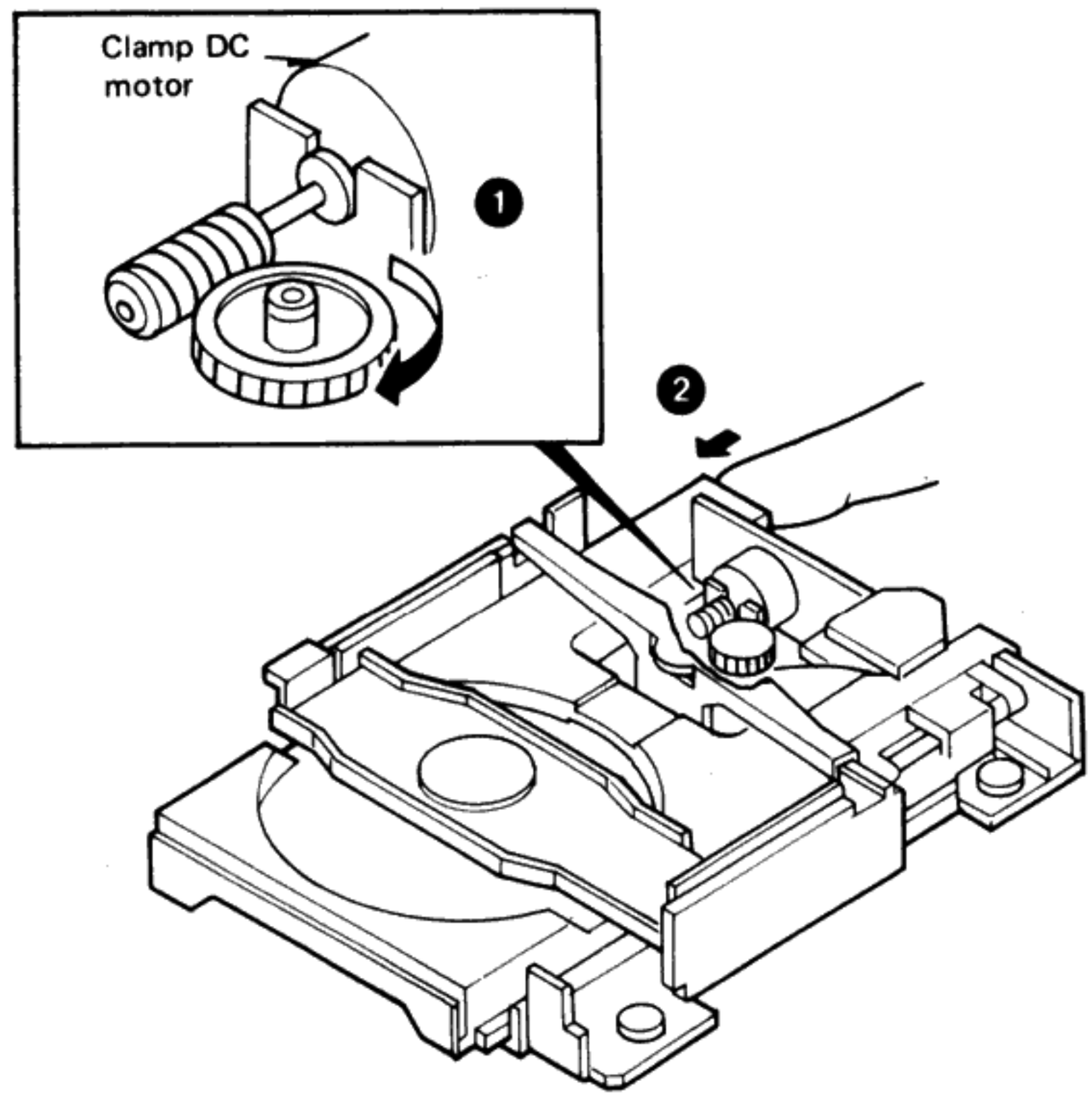

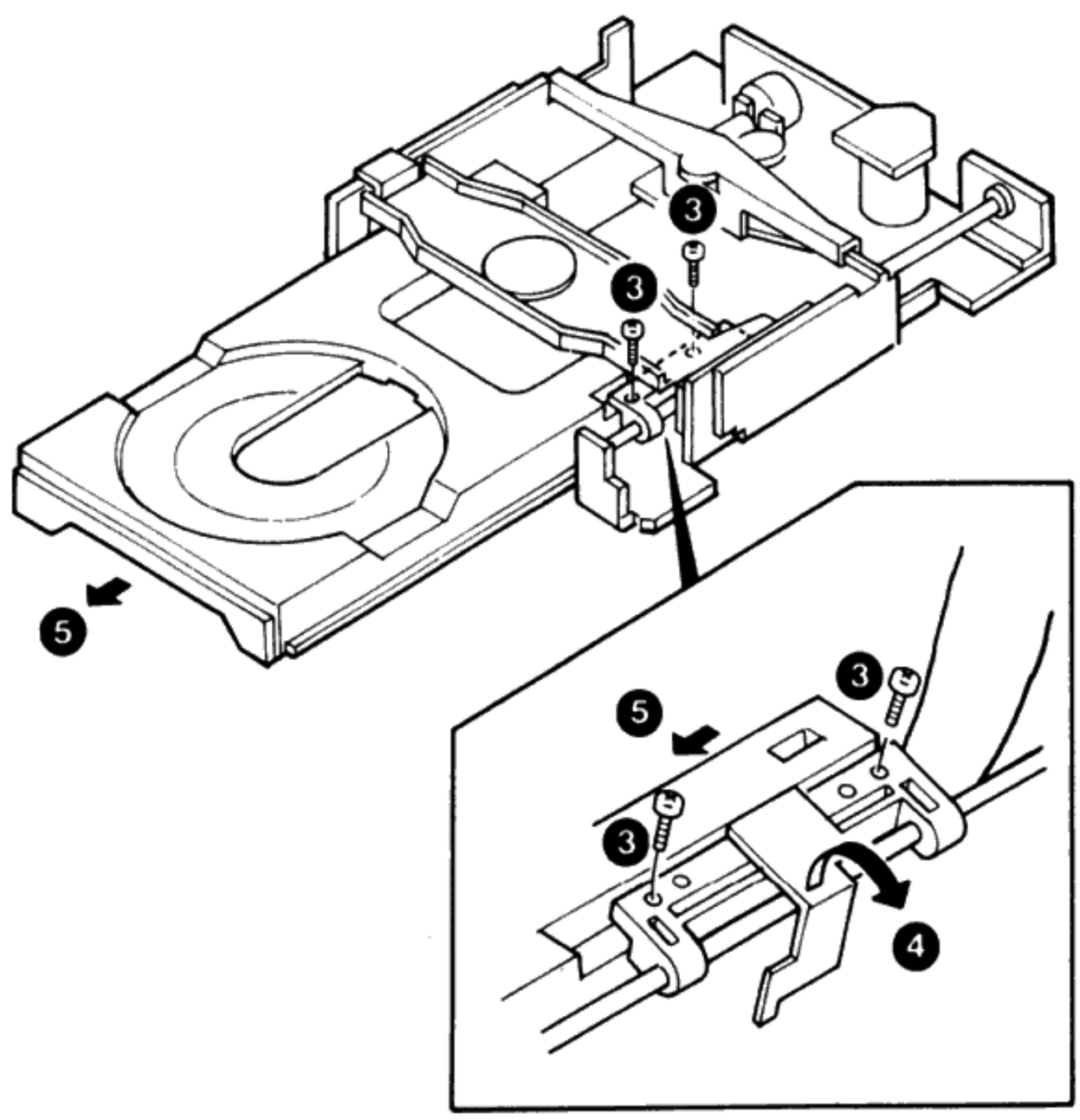

BLOCK DIAGRAM

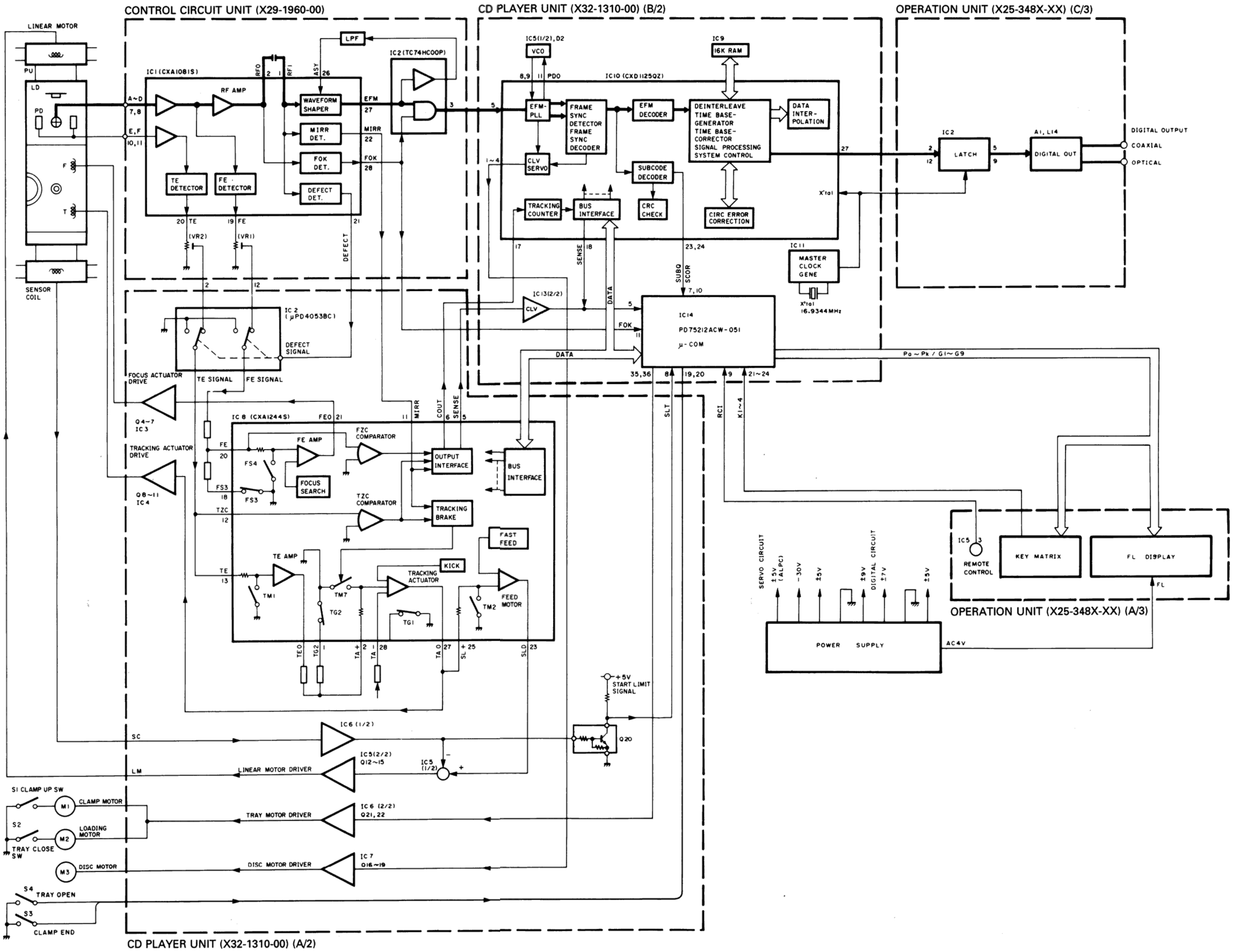

CIRCUIT DESCRIPTION

1. Description of components

1–1. OPERATION UNIT (X25-348X-XX) 0-21 : M 2-71 : P, X, T, E

Ref. No.	Part No.	Use/Function	Operation/Condition/Compatibility
IC1	M5218P NJM4560D	Operation amplifier	Error amplifier of ±7V regulated power supply.
IC2	74AC74PC	Digital out switch	Digital out ON/OFF selection, and DPAC process of digital out data.
IC3	µPC7805HF	3-terminal regulator	+5V regulator (for digital out).
IC4	TC74HC74P	D flip flop	PLAY/PAUSE indicator switch, which controls Q4 and Q5.
IC5	W02-0975-05	Remote control IC	Converts infrared remote control signal into logic from and transmits it to microprocessor.
Q1, 2	2SC3940A	Ripple filter	For ±7V regulated power supply.
Q3	2SC945(A)(Q,P) 2SC1740S(Q,R)	FL switch	The switch by which when the FL tube goes out, the FL tube and PLAY/PAUSE LED are lit again when any operation key is pressed.
Q4, 5	DTA124EN	Digital transistors	PLAY/PAUSE LED switch.

1–2. CONTROL CIRCUIT UNIT (X29-1960-00)

Ref. No.	Part No.	Use/Function	Operation/Condition/Compatibility
IC1	CXA1081S	RF amplifier	Generation of focus error signal, generation of tracking error signal, generation of RF signal and its phase correction, auto asymmetry correction.
IC2	TC74HC00P	NAND gate	EFMT signal waveform detection.
Q1	2SC945(A)(Q,P) 2SC1740S(Q,R)	Bias switch	Focus error amplifier bias selection switch.
Q2	2SA1426	LD switch	LD power supply switch, which is controlled by pin 5 (LD) of IC1.

1–3. CD PLAYER UNIT (X32-1310-00)

Ref. No.	Part No.	Use/Function	Operation/Condition/Compatibility
IC1	M5218P NJM4560D	Operation amplifier	Error amplifier of ±5V regulated power supply.
IC2	µPD4053BC	Analog switch	This receives the flaw detection signal (pin 21 (DEFECT) of IC1 : CXA1081S). Thus, when a flaw occurs, it turns OFF the focus servo and tracking servo to hold the signal prior to flaw detection. (Pins 10/11 (A/B) : "L" normally, "H" with flaw)
IC3	NJM4558D	Operation amplifier	For focusing actuator drive.
IC4	NJM4558D	Operation amplifier	For tracking actuator drive.
IC5	NJM4558D	Operation amplifier	For driving the linear motor.
IC6	NJM4558D	Operation amplifier	(1/2) : Velocity sensor coil signal amplifier. (2/2) : For driving the tray motor.
IC7	NJM4558D	Operation amplifier	For driving the disc motor.
IC8	CXA1244S	Servo IC	Generation of various pulse signals of focus, tracking and sled servos.
IC9	CXK5816SP-15L	S-RAM	Signal processing 16K static RAM.
IC10	CXD1125Q CXD1125QZ	Digital signal processing LSI	Digital signal processing such as of EFM data demodulation/correction/interpolation, PLL/CLV servo, digital out, etc.
IC11	TC74HC04P	Clock pulse oscillation	For master clock pulse oscillation (16.9344MHz).
IC12	µPC7805HF	3-terminal regulator	+5V regulator (for master clock).
IC13	M5218P NJM4560D	Operation amplifier	(1/2) : PLL compensation circuit (LPF + amplifier). (2/2) : CLV compensation circuit (LPF + level shifter).
IC14	µPD75212ACW-051	Microprocessor	Display, each key input process, servo IC control.
IC15	M51951ASL	Reset IC	Generation of reset signal at power ON/OFF.
IC16	M5218P NJM4560D	Operation amplifier	Error amplifier of ±5V regulated power supply.

CIRCUIT DESCRIPTION

Ref. No.	Part No.	Use/Function	Operation/Condition/Compatibility
Q1	2SA1124A	Ripple filter	For –30V power supply (for FL reference voltage).
Q2, 3	2SD1266	Ripple filter	For ±5V regulated power supply.
Q4	2SA1534A	Driver	Focus actuator driver.
Q5	2SC3940A	Driver	Focus actuator driver.
Q6	2SA1534A	Driver	Focus actuator driver.
Q7	2SC3940A	Driver	Focus actuator driver.
Q8	2SA1534A	Driver	Tracking actuator driver.
Q9	2SC3940A	Driver	Tracking actuator driver.
Q10	2SA1534A	Driver	Tracking actuator driver.
Q11	2SC3940A	Driver	Tracking actuator driver.
Q12	2SC3940A	Driver	Linear motor driver.
Q13, 14	2SA1534A	Driver	Linear motor driver.
Q15	2SC3940A	Driver	Linear motor driver.
Q16	2SB941	Driver	Disc motor driver.
Q17, 18	2SD1266	Driver	Disc motor driver.
Q19	2SB941	Driver	Disc motor driver.
Q20	DTC124EN	Switch	Pickup start limit switch position detection, which is made by linear motor speed signal.
Q21	2SA1534A	Driver	Tray motor driver.
Q22	2SC3940A	Driver	Tray motor driver.
Q23	2SC945(A)(Q,P) 2SC1740S(Q,R)	Driver	FL display tube G9 driver.
Q24, 25	2SC3940A	Ripple filter	For ±5V regulated power supply.
Q26	2SC945(A)(Q,P) 2SC1740S(Q,R)	Switch	Key input inhibit switch when FL display tube is lighting.

CIRCUIT DESCRIPTION

2. CD player unit (X32-1310-00)

• Pickup carry circuit by linear motor

The speed sensor generates a voltage proportional to the moving speed of the pickup mount. More, since this voltage is yet low in level, it is amplified at IC5(2/2).

Therefore, the voltage at point Ⓐ becomes the signal standing for the moving speed of the pickup mount. This speed signal is inverted and amplified, and further the drive coil is driven so that the pickup amount is servo-controlled in respect to the moving speed.

The use of IC5(1/2) and drivers Q14/Q15 is intended to expand the dynamic range in driving the drive coil of the linear motor. The voltage at point Ⓑ serves as the moving speed reference of the pickup amount. In addition, the pickup amount moves at a speed proportional to the voltage at point Ⓑ.

Example: When the voltage at point Ⓑ is 0V, the pickup mount does not move, whereas when it is positive, the pickup mount moves inwards at a speed proportional to that voltage.

The voltage at point Ⓑ is the same as the voltage driving the pickup carry motor in a conventional mechanism and can be represented to a servo block diagram as shown in Figure 2-1, which manifests a direct feedback system.

Thus, if value Ⓐ is sufficiently large, Ⓐ = Ⓑ.

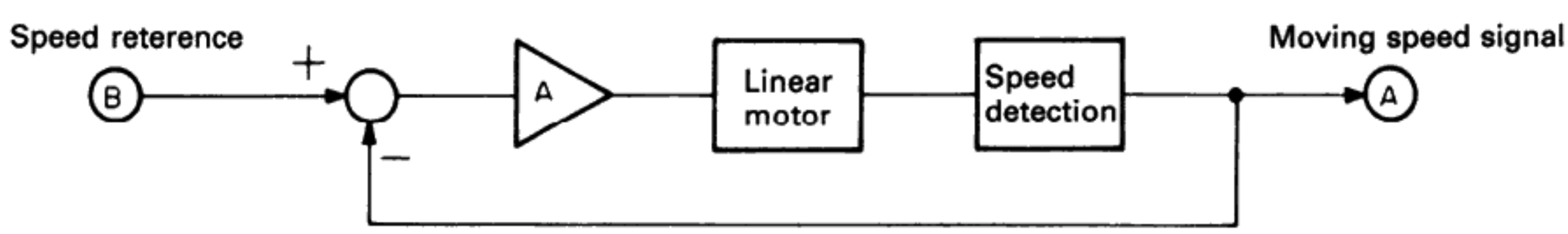

Fig. 2–1

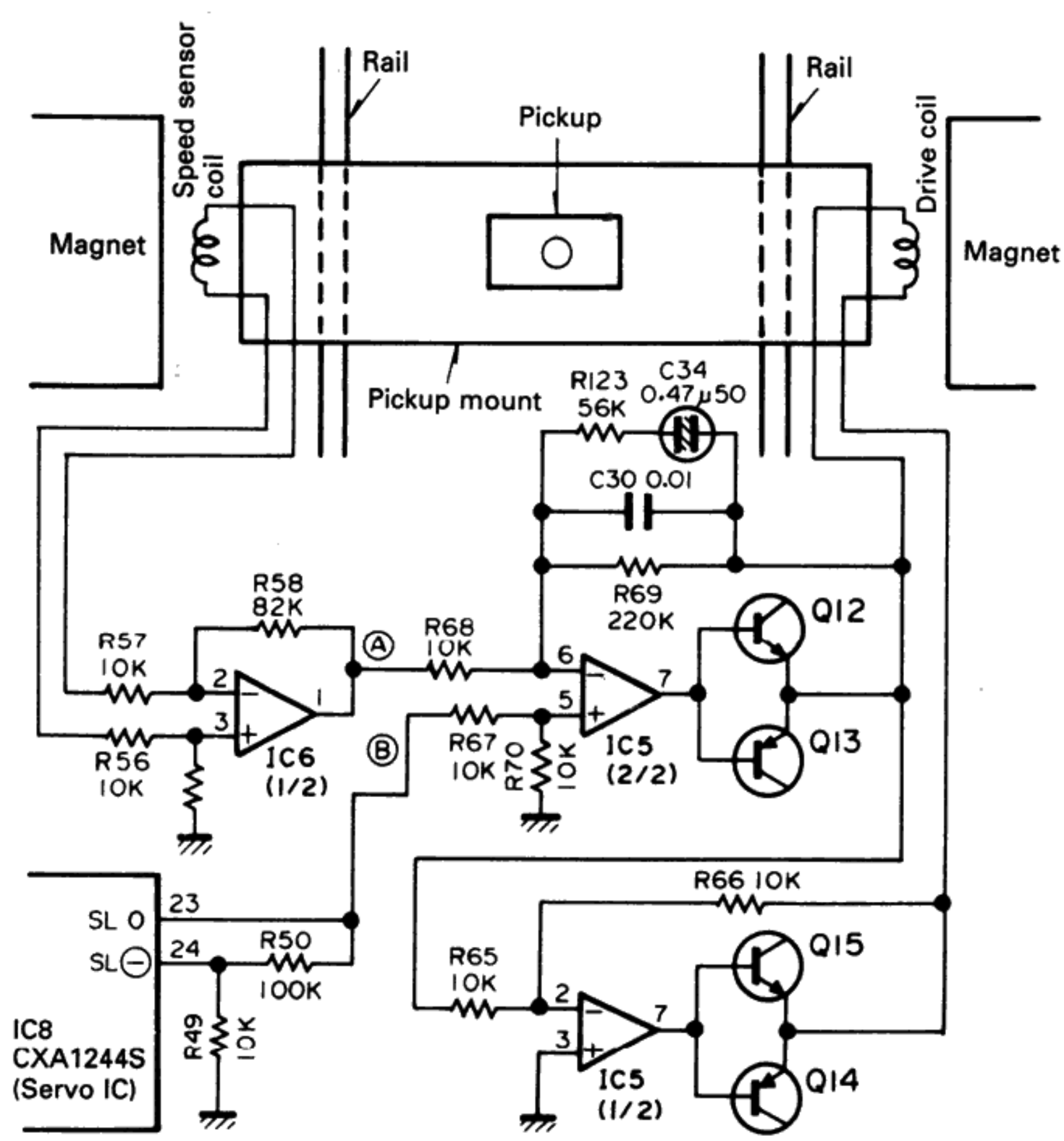

Fig. 2–2 Pickup carry circuit by linear motor

3. Set mode flowchart

3–1. Outline after POWER ON

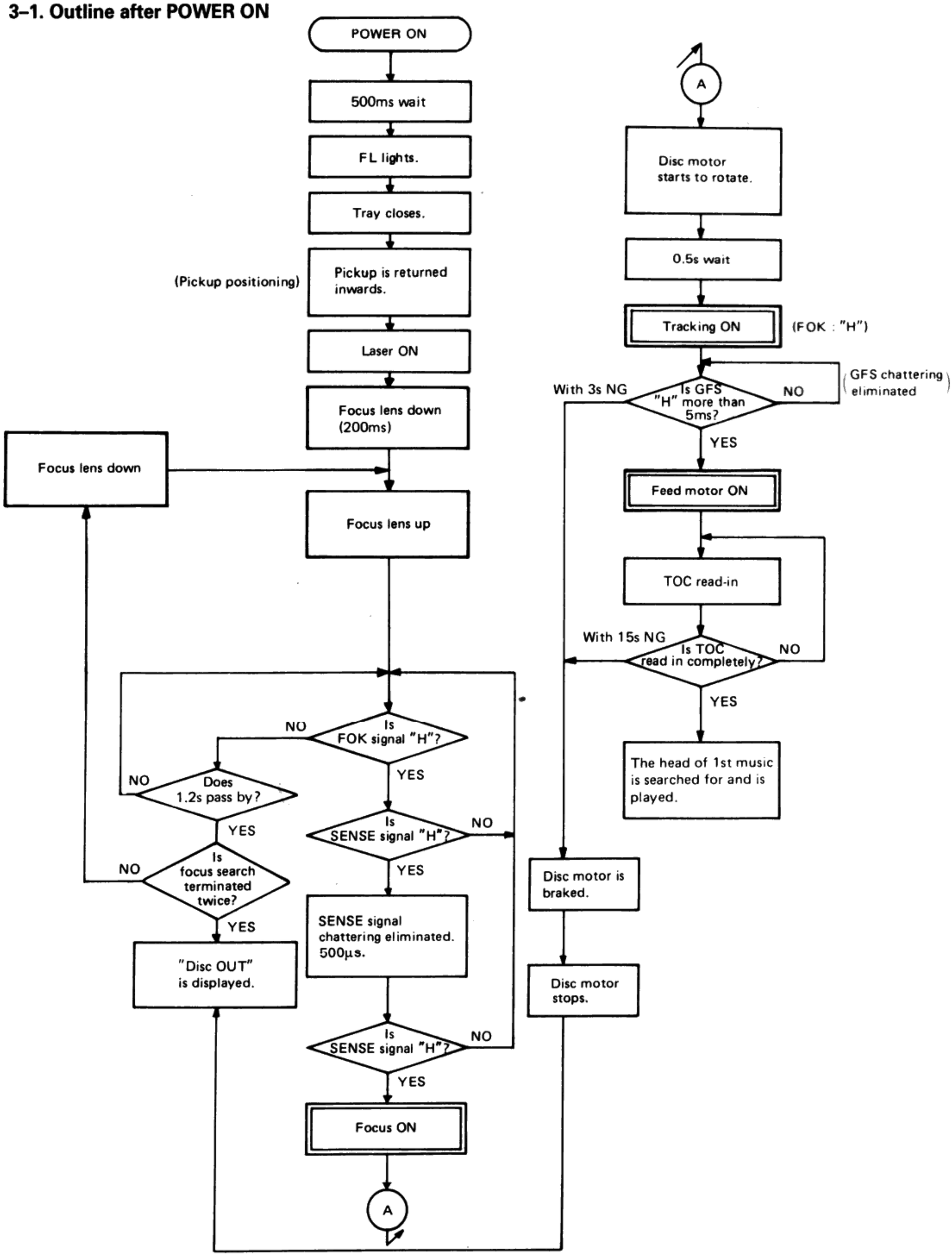

CIRCUIT DESCRIPTION

4. Test mode

With the DP-X9010, the microprocessor can be set to test mode by short-circuiting pin 7 and pin 8 of the CD PLAYER UNIT (X32-1310).

Note : "Set mode" shows the normal status.

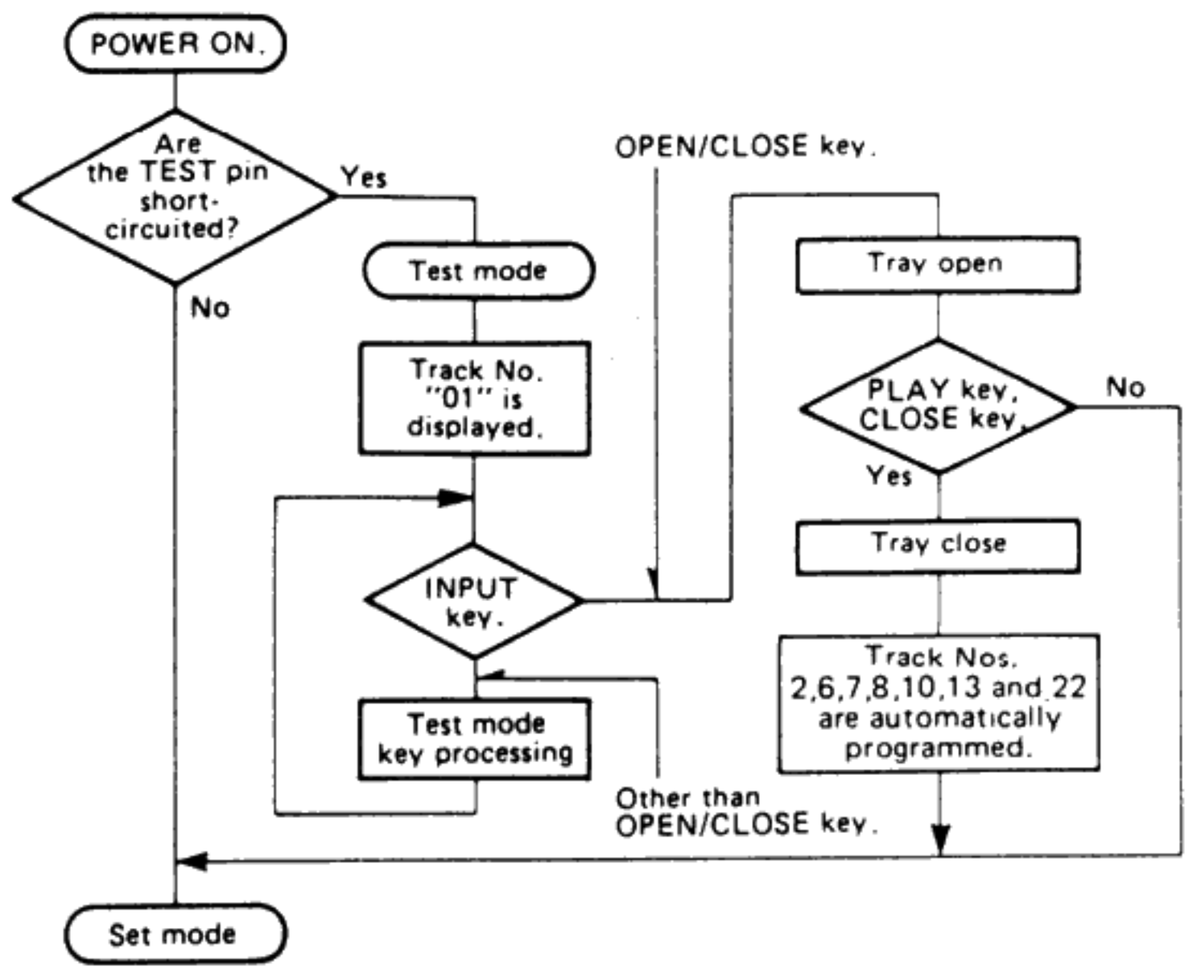

4-1. Key and functions valid in test mode

No.	Input key	Function	Track No. display
1	PLAY/PAUSE	(1) Focusing servo ..... ON (2) Tracking servo ..... ON (3) Feed servo ..... ON When the key is pressed in the STOP mode, the servoes are switched ON automatically in the order from (1) to (3).	TRACK NO. 05 ↓ Display for a few seconds after completion of (1), (2) and (3). ↓ Disc Track No. is displayed.
2	Short-circuiting pin 8 and pin 9 of X32-1310 (B/2)	(1) Focusing servo ..... ON (2) Tracking servo ..... OFF (3) Feed servo ..... OFF	TRACK NO. 03
3	Short-circuiting pin 9 and pin 10 of X32-1310 (B/2)	(1) Focusing servo ..... ON (2) Tracking servo ..... ON (3) Feed servo ..... OFF	TRACK NO. 04
4	STOP	(1) Focusing servo ..... OFF (2) Tracking servo ..... OFF (3) Feed servo ..... OFF	TRACK NO. 01
5	REPEAT	(1) Tray ..... Opened (2) Laser ..... ON The REPEAT function is canceled when the tray is closed by pressing the tray OPEN/CLOSE key. The Track No. display 01	TRACK NO. 02
6	▶▶	In the STOP mode, moves the pickup slightly toward the outer position of disc. When feed servo is ON, sets the track gain to "H".	
7	◀◀	In the STOP mode, moves the pickup slightly toward the inner position of disc. When feed servo is ON, sets the track gain to "L".	
8	OPEN/CLOSE	When the tray is opened and the closed again in test mode, Track Nos 2, 6, 7, 8, 10, 13 and 22 are automatically programmed. Opening the tray again will cause the unit to enter set mode.	
9	SKIP ▶▶|	Turns all FL display lamps ON.	
10	SKIP |◀◀	Turns all FL display lamps OFF. (except Track No. and levels)	

4–2. Flowchart of test mode

• Flowchart from tray OPEN status after power ON

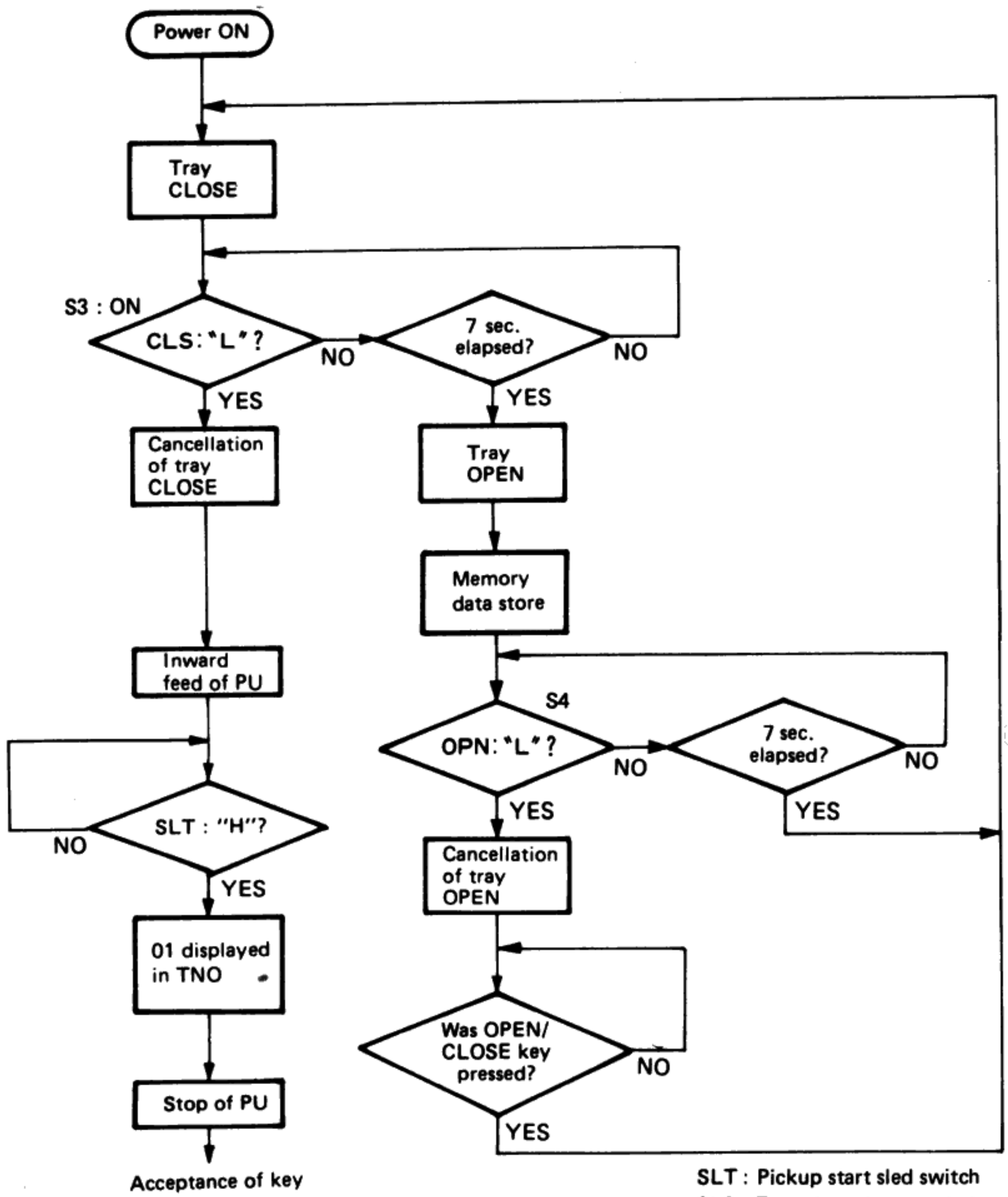

SLT : Pickup start sled switch
CLS : Tray close detect switch
OPEN : Tray open detect switch

- **Focus search & focus servo ON**

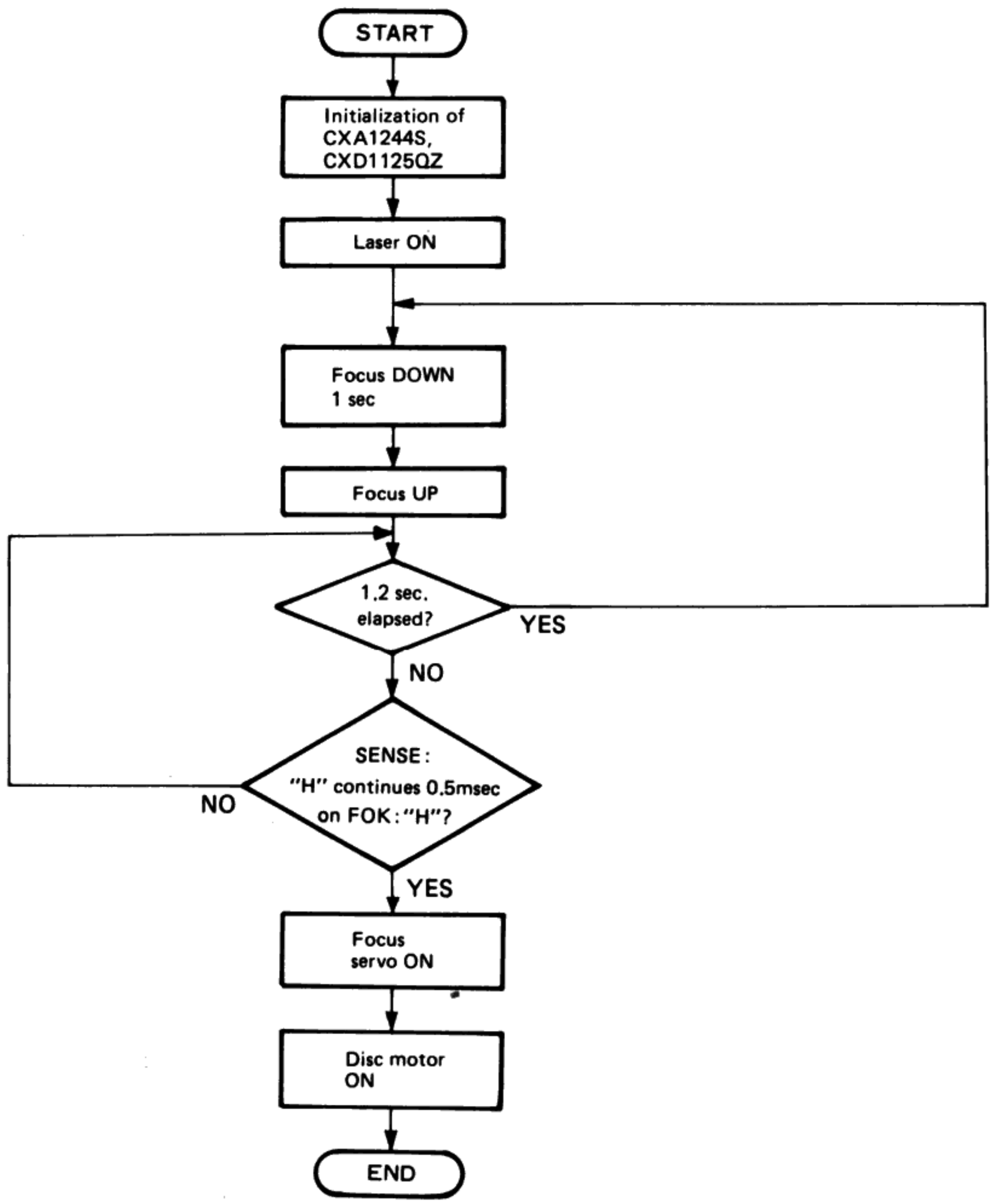

CIRCUIT DESCRIPTION

• **Tracking servo ON**

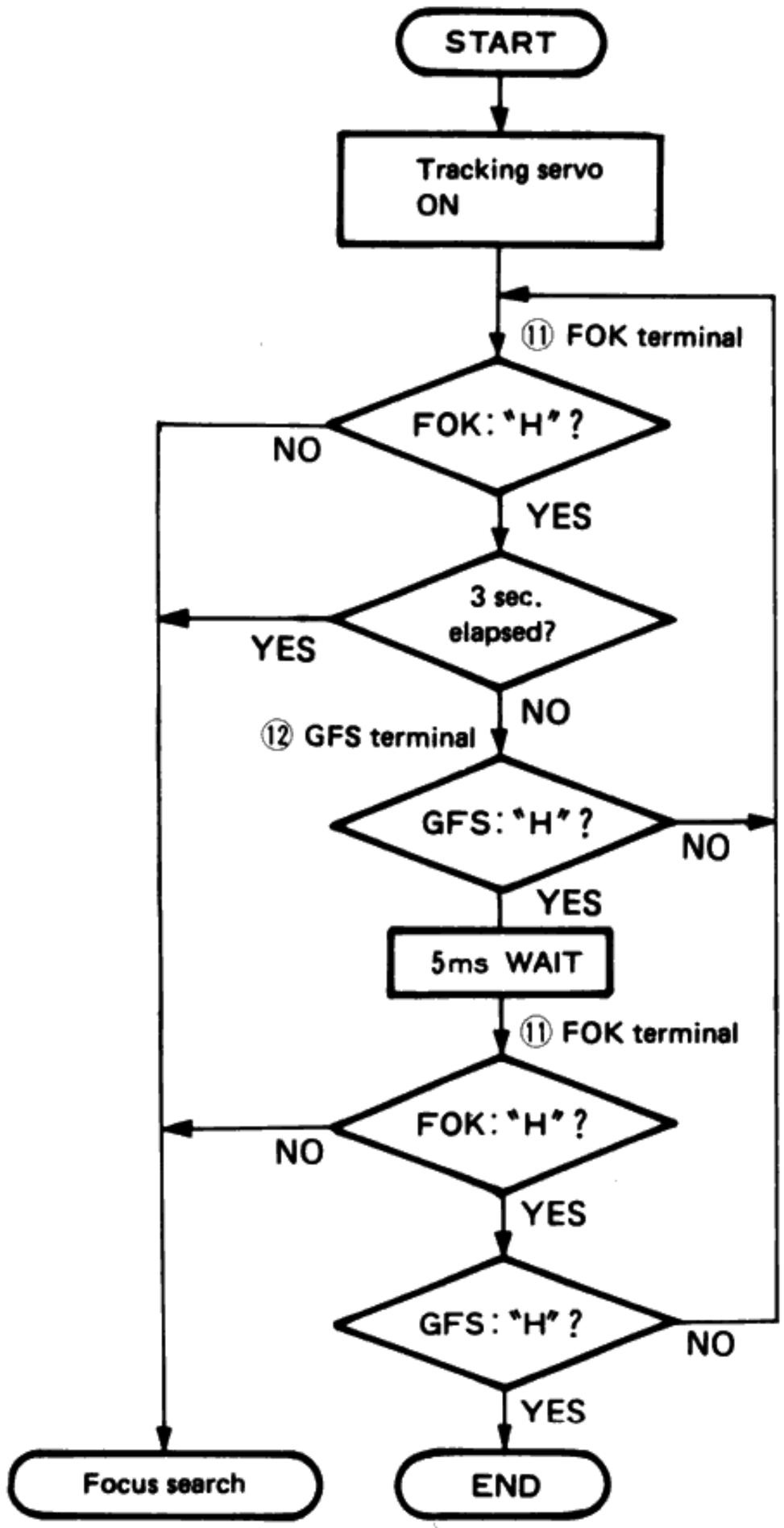

• **Disc motor STOP**

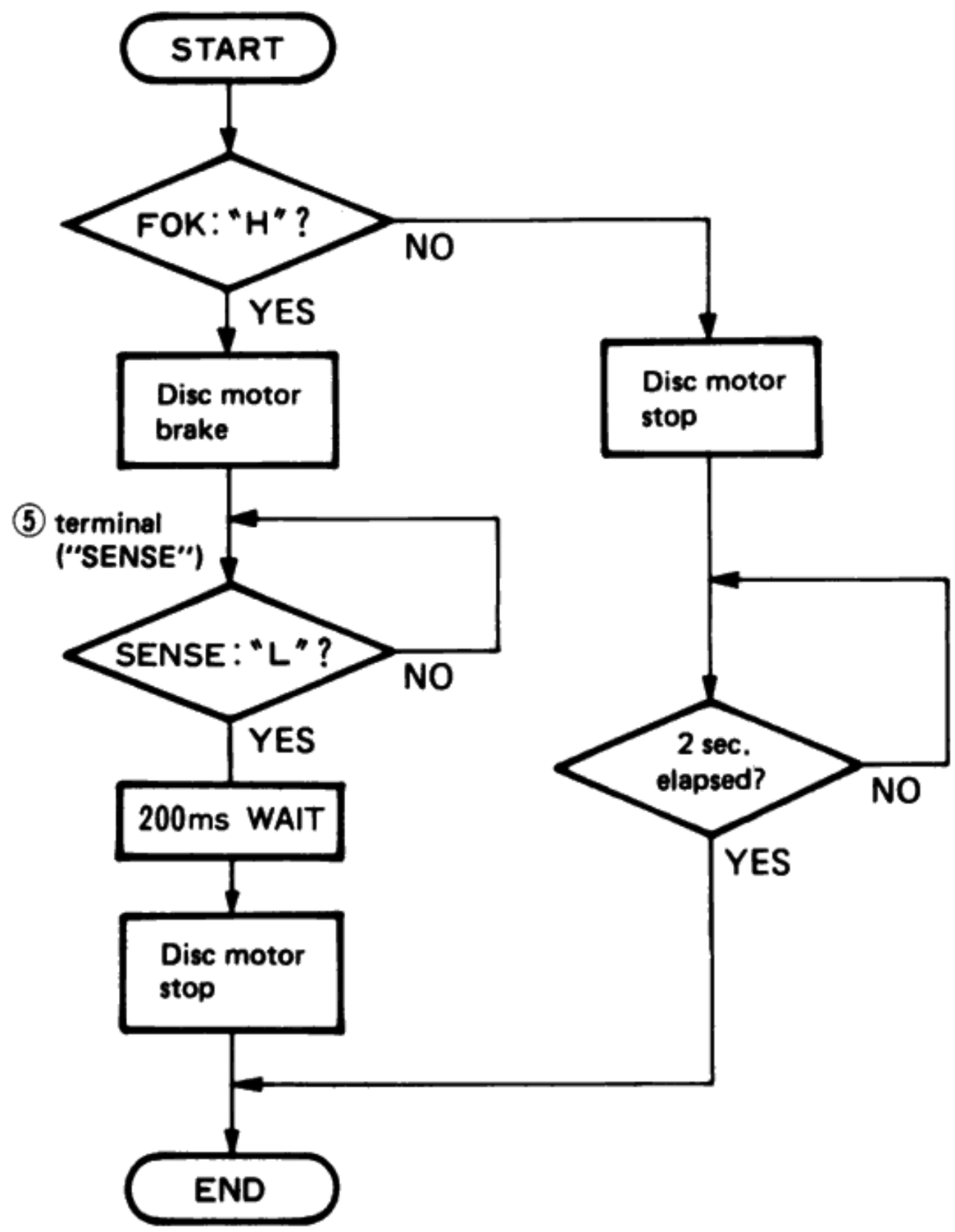

CIRCUIT DESCRIPTION

• From loading of Q data to display

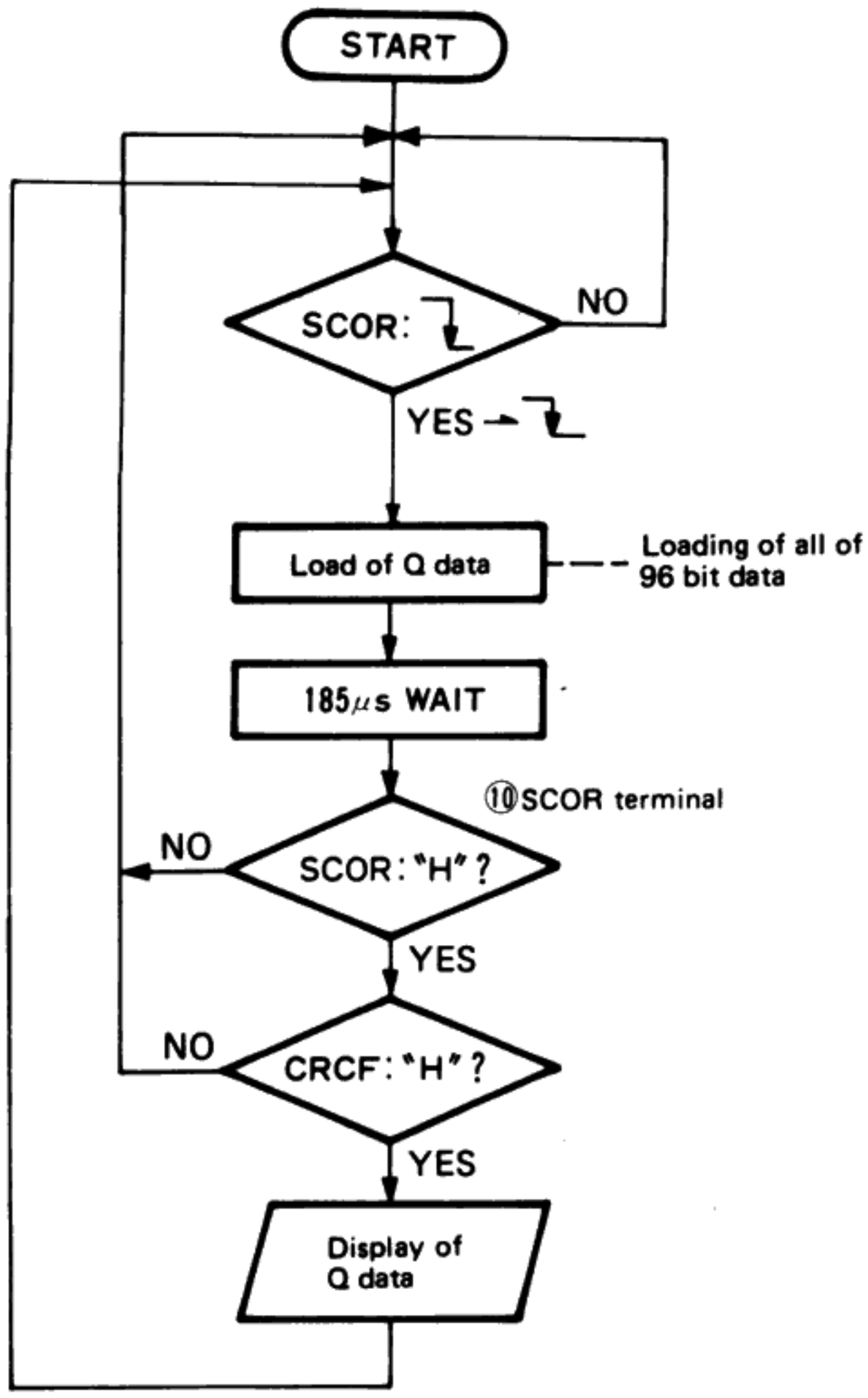

• In a usual case, since the tray OPEN/CLOSE key was pushed on when the tray is OPEN until STOP display is made.

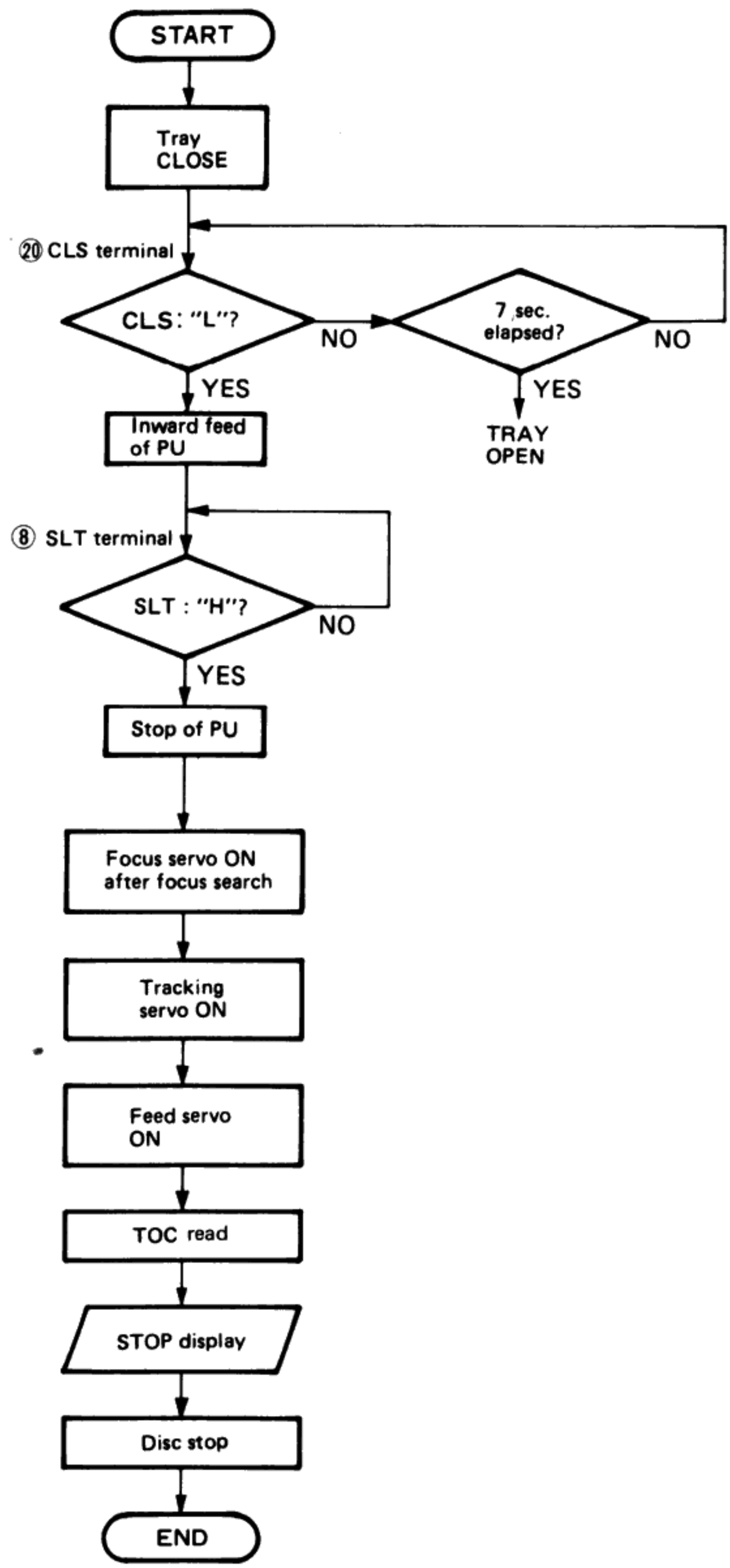

CIRCUIT DESCRIPTION

5. Microprocessor μPD75212ACW-051 (X32-1310-00 : IC14)

5–1. Terminal connection diagram

Note : Keys encircled in ◎ are located on the front panel and printed circuit board of the main body. Other keys are provided on the remote control unit.

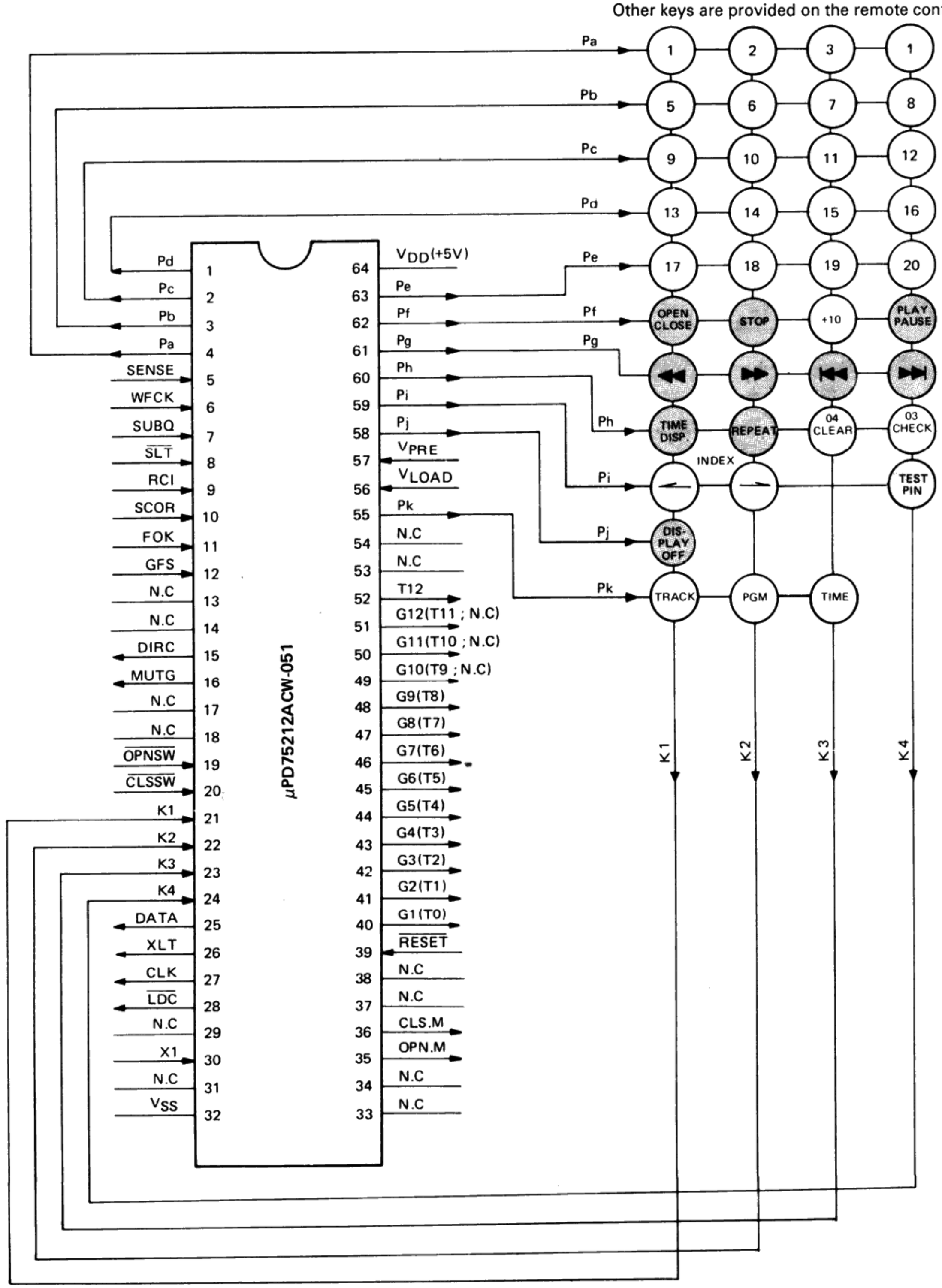

5-2. Explanation of terminals

Pin No.	Pin Name	I/O	Function
1~4	Pd~Pa	O	FL segment control pins (also for key scan signal).
5	SENSE	I	Signal processing, detection of SENSE from servo IC.
6	WFCK	I	Q-data read clock pulse input pin.
7	SUBQ	I	Q-data input pin.
8	$\overline{SLT}$	I	Sled limit switch (At innermost : "L").
9	RCI	I	Remote control input pin.
10	SCOR	I	Sub-code frame sync detection signal input pin (Input from CXD1125QZ).
11	FOK	I	RF amplifier FOK signal input pin (At the RF signal is sufficient value : "H").
12	GFS	I	Frame sync signal input pin (In frame sync : "H").
13,14	–	–	Unused.
15	DIRC	O	Servo IC DIRC pin (Output to CXA1244S).
16	MUTG	O	Signal processing IC MUTE pin (Active "H").
17,18	–	–	Unused.
19	$\overline{OPNSW}$	I	Tray open switch (Open : "L").
20	$\overline{CLSSW}$	I	Tray close switch (Close : "L").
21~24	K1~K4	I	Key matrix key return input pins.
25	DATA	O	Signal processing, servo IC control output pin (Control data signal).
26	XLT	O	Signal processing, servo IC control output pin (Control data latch signal).
27	CLK	O	Signal processing, servo IC control output pin (Control data send clock signal).
28	$\overline{LDC}$	O	Laser ON/OFF signal output pin (Active "L").
29	–	–	Unused.
30	X1	I	System clock pulse input pin.
31	–	–	Unused.
32	VSS	–	GND.
33,34	–	–	Unused.
35	OPN.M	O	Tray open/close motor drive signal output pins. Normally ..... OPN.M : "L", CLS.M : "L" At open ..... OPN.M : "H", CLS.M : "L" At close ..... OPN.M : "L", CLS.M : "H"
36	CLS.M	O	
37,38	–	–	Unused.
39	$\overline{RESET}$	I	Reset input pin (Active "L").
40~51	G1(T0)~G12(T11;NC)	O	FL digit control pins.
52	T12	O	FL digit control pin.
53,54	–	–	Unused.
55	Pk	O	FL segment control pin (also for key scan signal).
56	VLOAD	I	FL driver negative power supply (–30V).
57	VREF	I	FL predriver negative power supply (–5V).
58~63	Pj~Pe	O	FL segment control pins (also for key scan signal).
64	VDD	–	Power supply (+5V).

CIRCUIT DESCRIPTION

6. RF AMP. CXA1081S (X29-1960-00 : IC1)

General

The CXA1081M is an IC developed for use in Compact Disc players. It incorporates a 3-spot optical pickup RF output amplifier, a focusing error amplifier, a tracking error amplifier, and other signal processing circuitry, such as focus OK, mirror, defect, and EFM comparator circuits, as well as a laser diode APC (Automatic Power Control) circuit.

Features

- Operates on a signal +5 V power supply, as well as on a ±5 V dual-voltage power supply.
- Low power consumption (100 mW with ±5 V, 50 mW with +5 V).
- An APC circuit which accepts either a P-sub or N-sub laser diode.
- A minimum of external parts required
- A disc defect detector circuit for improved playability.

Structure

Bipolar silicon monolithic IC

Functions

- RF amplifier
- Focus OK detector circuit
- Mirror detector circuit
- Tracking error amplifier
- Defect detector circuit
- APC circuit
- EFM comparator
- Auto asymmetry control amplifier

6–1. Block diagram

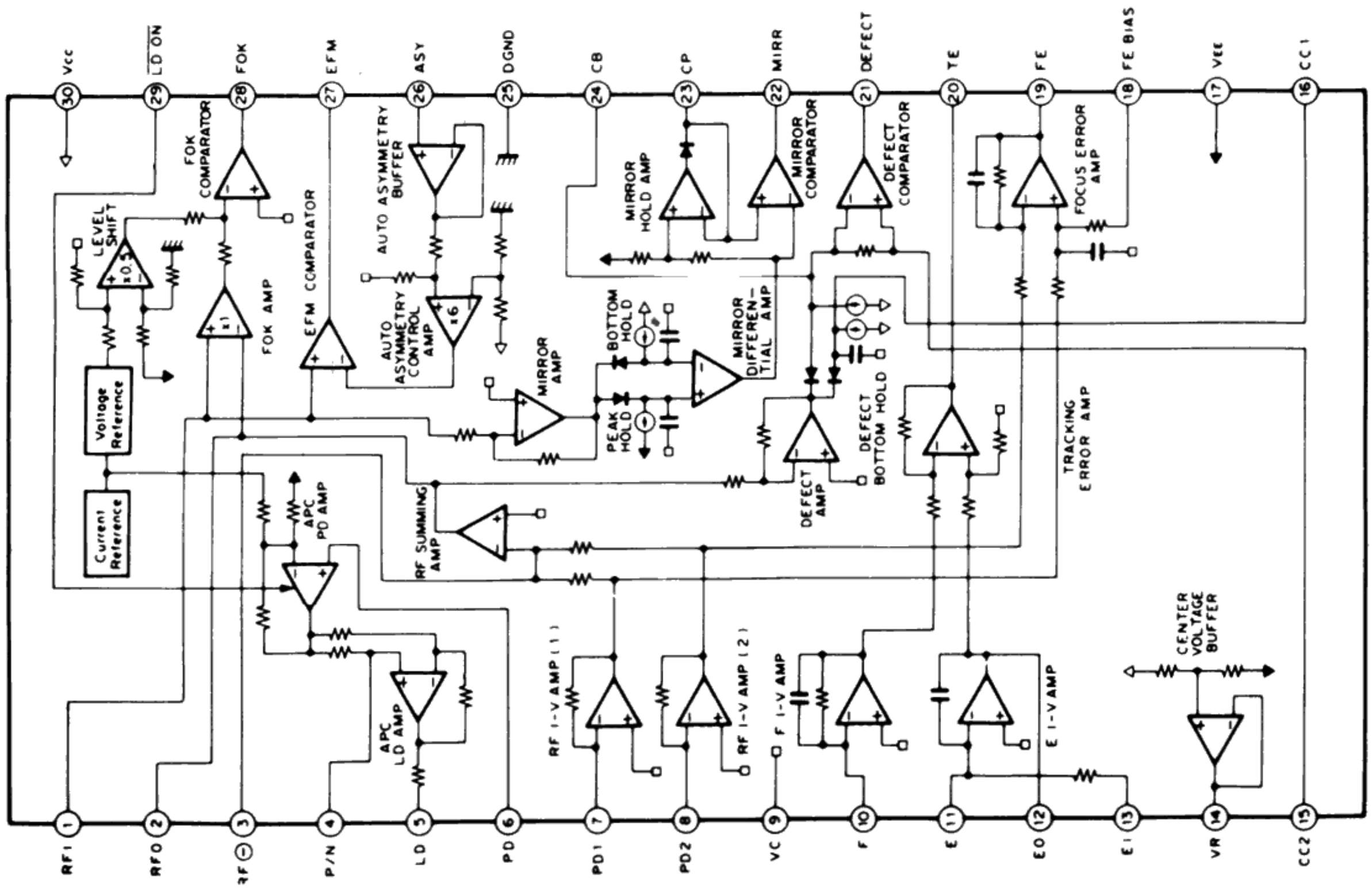

CIRCUIT DESCRIPTION

6–2. Explanation of terminals (V_{CC} = 2.5V, V_{EE} = D_{GND} = –2.5V, VC = GND)

Terminal No.	Terminal name	I/O	DC voltage (V)	Function
1	RFI	I	0	Input pin for the C-coupled signal output from the RF summing amplifier
2	RFO	O	V_{RFO}	RF summing amplifier output pin. Used as the check point for the eye pattern
3	RF⊖	I	0	RF summing amplifier feedback input pin.
4	P/N	I	0 (VC)	P-sub/N-sub select pin for the LD (Laser Diode). (DC voltage: in N-sub mode)
5	LD	O	–1.8	*APC LD amplifier output pin. (DC voltage: PD open in N-sub mode)
6	PD	I	0	*APC LD amplifier input pin. (DC voltage: open)
7	PD1	I	0	RF I-V amplifier (1) inverted input pin Current input by connecting to the photodiode A + C terminal
8	PD2	I	0	RF I-V amplifier (2) inverted input pin. Current input by connecting to the photodiode B + D terminal.
9	VC	—	0	Connected to GND when using a positive (+)/negative (–) dual-voltage power supply Connected to VR (pin 14) when using a single-voltage power supply
10	F	I	0	F I-V amplifier inverted input pin Current input by connecting to the photodiode F terminal
11	E	I	0	E I-V amplifier inverted input pin Current input by connecting to the photodiode E terminal
12	EO	O	0	E I-V amplifier output pin.
13	EI	I	0	E I-V amplifier feedback input pin. For E I-V amplifier gain adjustment
14	VR	O	V_{CVO}	DC voltage output pin of (V_{CC} + V_{EE})/2.
15	CC2	I	1.0	Input pin for the C-coupled signal output from the defect bottom hold.
16	CC1	O	1.2	Defect bottom hold output pin
17	V_{EE}	—	–2.5	Connected to the negative power supply when using a positive (+)/negative (–) dual-voltage power supply. Connected to GND when using a single-voltage power supply
18	FE BIAS	I	0	Bias pin on the focus error amplifier non-inverted side For CMR adjustment of the focus error amplifier.
19	FE	O	V_{FEO}	Focus error amplifier output pin
20	TE	O	V_{TEO}	Tracking error amplifier output pin.
21	DEFECT	O	V_{DFCTL}	Defect comparator output pin. (DC voltage: connected to a 10 k-ohm load)
22	MIRR	O	V_{MIRL}	Mirror comparator output pin. (DC voltage: connected to a 10 k-ohm load).
23	CP	I	–1.3	Mirror hold capacitor output pin Mirror comparator non-inverted input.
24	CB	I	0	Defect bottom hold capacitor connect pin.
25	DGND	—	–2.5	Connected to GND when using a positive (+)/negative (–) dual-voltage power supply Connected to GND (V_{EE}) when using a single-voltage power supply.
26	ASY	I	—	Auto asymmetry control input pin
27	EFM	O	V_{EFMH}	EFM comparator output pin. (DC voltage: connected to a 10 k-ohm load)
28	FOK	O	V_{FOKL}	FOK comparator output pin. (DC voltage: connected to a 10 k-ohm load).
29	LD ON	I	–2.5 (DGND)	LD ON/OFF select pin. (DC voltage: when LD ON)
30	V_{CC}	—	2.5	Positive power supply.

*APC: Automatic Power Control

CIRCUIT DESCRIPTION

7. Servo control CXA1244S (X32-1310-00 : IC8)

CXA1244S is a bipolar IC developed for servo of compact disc (CD) players, and it provides the following functions.

- ○Focus control (search ON/OFF, gain control)
- ○Tracking control (servo ON/OFF, single track jump, multiple track jump, gain control, phase compensation control, brake circuit)
- ○ Sled control (servo ON/OFF, fast forward, fast reverse)

Servo function of each of focus, tracking and sled as well as random access operation are realized through control by microcomputer. Furthermore, the serial data bus be shared with CXD1125QZ.

7–1. Terminal connection diagram

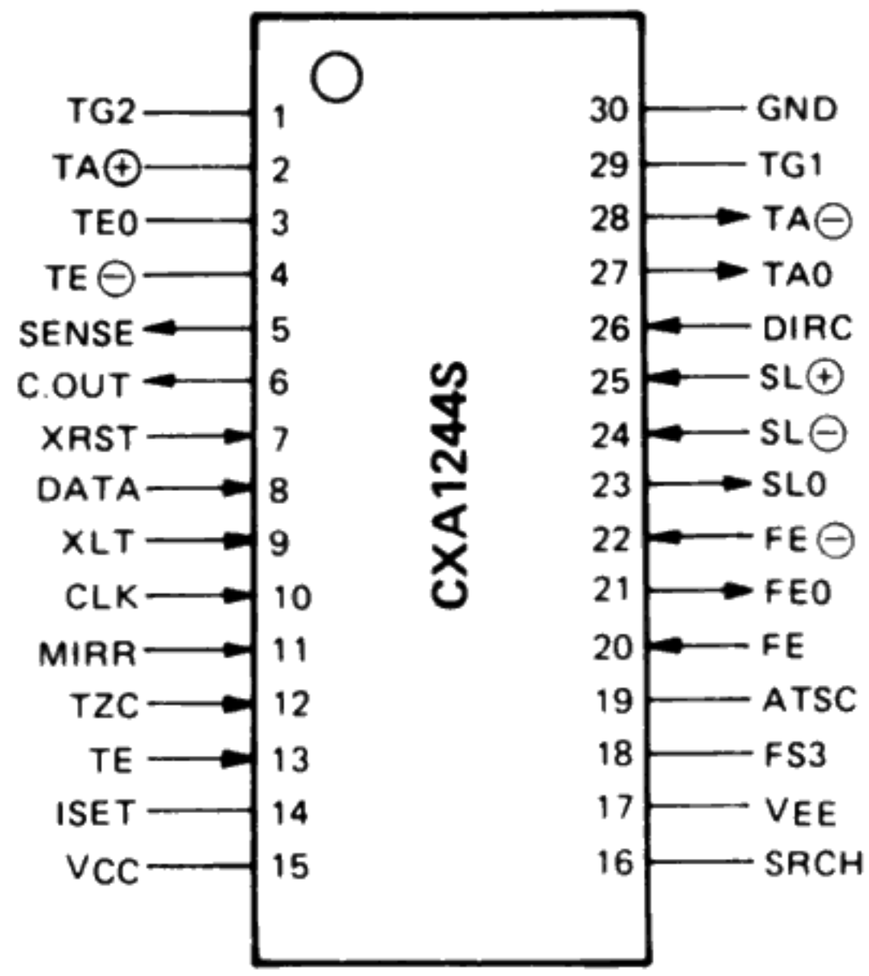

7–2. Block diagram

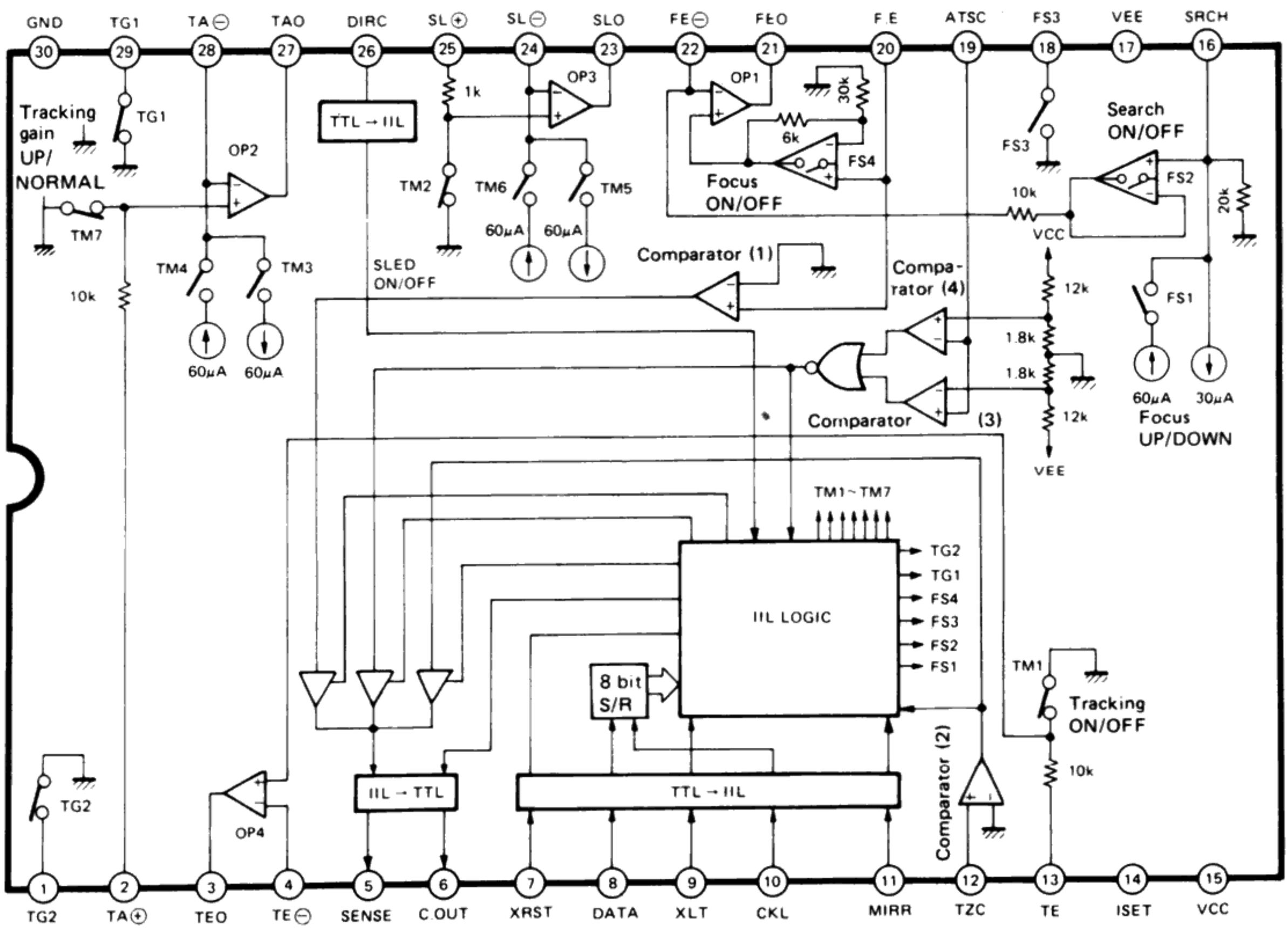

CIRCUIT DESCRIPTION

7–3. Explanation of terminals

Terminal No.	Terminal name	I/O	Functions
1	TG2		Tracking amplifier gain switching terminal. GND level.
2	TA ⊕		Non-inverted input of operational amplifier 2.
3	TE0		Output of operational amplifier 4.
4	TE ⊖	O	Inverted input of operational amplifier 4.
5	SENSE	O	Output of SSP internal status that corresponds to ADDRESS of CPU → SSP. (Changes in accordance with ADDRESS content of internal serial register.) See Note 1.
6	C. OUT	O	Signal output for counting number of tracks at the time of high speed access.
7	XRST	I	All internal registers are cleared when CPU → SSP "L". Connected with CPU RESET. See Note 2.
8	DATA	I	Serial data transmission of CPU → SSP. Input is made from LSB. D0~D7.
9	XLT	I	Latch of serial data of CPU → SSP. (The contents of internal serial register are transmitted to each address decoded latch.) Transmission at "L". Change to "H" occurs immediately after execution because no edge trigger is produced.
10	CLK	I	CPU → SSP serial data transmission clock. Data is read at falling. "H" level before and after transmission.
11	MIRR	I	Mirror signal input from RF amplifier.
12	TZC	I	Tracking error signal is input with C couple. The time constant is determined by one single track jump, but it is usually around 2kHz.
13	TE	I	Tracking error signal input.
14	ISET		Setting of current level for determining focus search voltage, tracking jump voltage and sled feed voltage.
15	Vcc		Power supply terminal. Normally −5V.
16	SRCH		The capacitor for determining the time constant of charge/discharge waveform for focus search is connected.
17	VEE		Power supply terminal. Normally −5V.
18	FS3		Focus amplifier gain switching terminal. GND level.
19	ATSC		Such information that a mechanical shock was applied to the player is input. Simply, a trakcing error is input through B.P.F.
20	FE	I	Input of focus error signal.
21	FE0	O	Output of operational amplifier 1.
22	FE ⊖	I	Inverted input of operational amplifier 1.
23	SL0	O	Output of operational output 3.
24	SL ⊖	I	Inverted input of operational amplifier 3.
25	SL ⊕	I	Non-inverted input of operational amplifier 3.
26	DIRC	I	Used at the time of one track jump. Normally "H". The direction of the track jump pulse is reversed with "L". Setting is made in the normal tracking mode by changing to "H". "L" for a fixed length of time with detection of activation, deactivation of TZC.
27	TA0	O	Output of operational amplifier 2.
28	TA ⊖	O	Inverted input of operational amplifier 2.
29	TG1		Tracking amplifier gain switching terminal. GND level.
30	GND		GND terminal of IC.

Note 1 : SENSE terminal output

Serial data upper 4 bits	ADDRESS content	SENSE terminal output	Explanation
0 0 0 0	FOCUS CONTROL	FZC	"H" when focus zero cross, Focus erro voltage is 0V or higher. Used at the time of FOCUS PULL operation.
0 0 0 1	TRACKING CONTROL	AS	"H" when the ATSC input level exceeds the wind comparator level (VTH = ±Vcc x 13%). But this is not used in this equipment.
0 0 1 0	TRACKING MODE	TZC	Judgement output of positive or negative of tracking zero cross, tracking error. When used at the time of single track jump, DIRC is reduced to "L" on detection of TZC ↑, in FWD JUMP or on detection of TZC ↓ in REV JUMP.

Note 2 : Digital unit timing chart

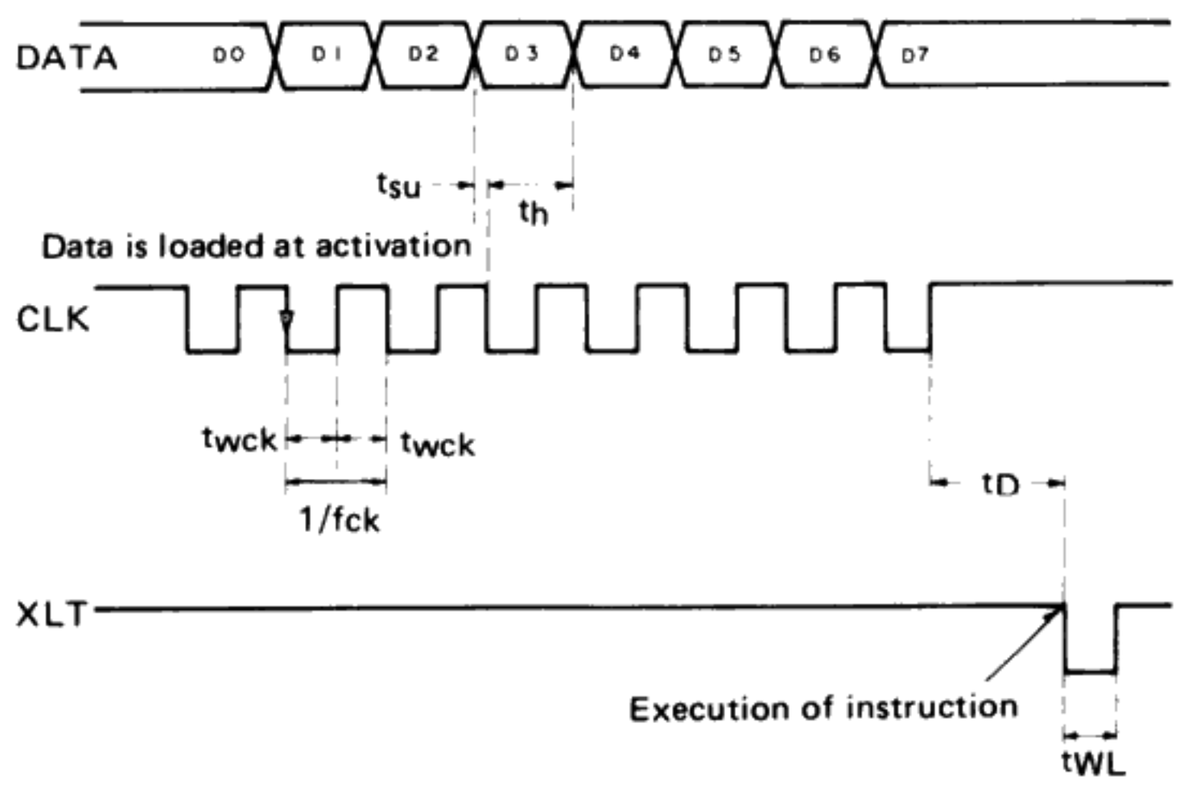

7–4. System control

COMMAND	ADDRESS				DATA				SENSE
	D7	D6	D5	D4	D3	D2	D1	D0	
FOCUS CONTROL	0	0	0	0	FS4 FOCUS ON	FS3 GAIN DOWN	FS2 SEARCH ON	FS1 SEARCH UP	FZC
TRACKING CONTROL	0	0	0	1	ANTI SHOCK	BREAK ON	TG2 GAIN	TG1* SET	AS
TRACKING MODE	0	0	1	0	TRACKING* MODE		SLED* MODE		TZC

GAIN SET* TG1, TG2 may be set independently.
In the case of ANTI SHOCK = 1 (00011XXX), both TG1, TG2 are inverted when ANTI SCHOCK = "H".

SLED MODE*

	D1	D0
OFF	0	0
SERVO ON	0	1
FWD MOVE	1	0
REV MOVE	1	1

TRACKING MODE*

	D3	D2
OFF	0	0
SERVO ON	0	1
FWD JUMP	1	0
REV JUMP	1	1

CIRCUIT DESCRIPTION

8. Signal processor CXD1125QZ (X32-1310-00 : IC10)

General

The CXD1125QZ is a digital signal processing LSI for a Compact Disc player, and has the following functions.

1. Bit clock reproduction by an EFM-PLL circuit
2. EFM data demodulation
3. Frame sync signal detection, protection and insertion
4. Powerful error detection and correction
5. Interpolation with an average value, or by holding the previous value
6. Demodulation of a sub code signal, error detection of a sub code Q
7. Spindle motor CLV servo
8. 8-bit tracking counter
9. CPU interface with a serial bus
10. Sub code Q register
11. Digital filter
12. Digital audio interface output

Features

- All digital signals used in playback can be processed using only a single chip.
- An aperture-correction digital filter is built in

Structure

CMOS IC

8–1. Block diagram

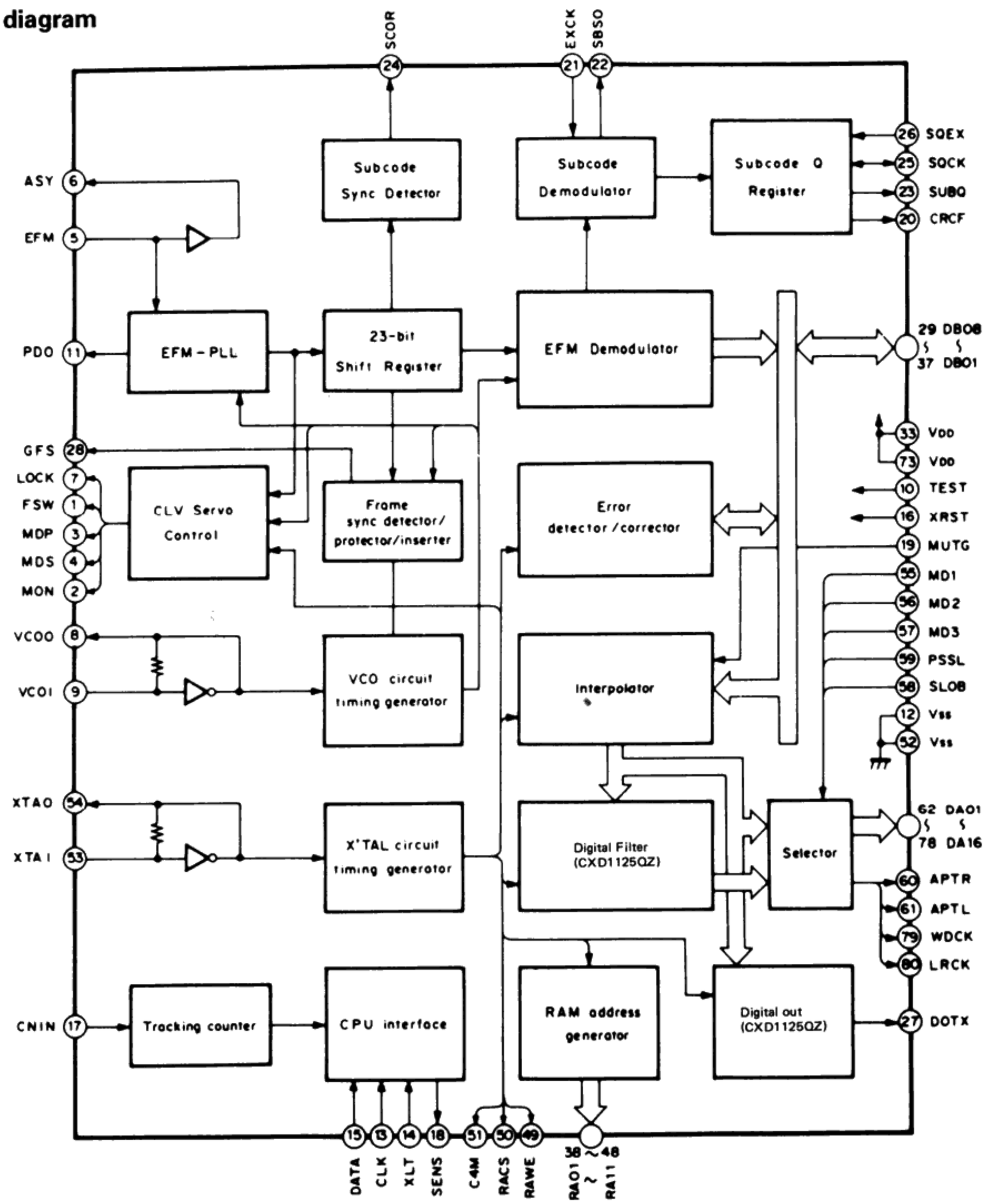

8–2. Explanation of terminals

Terminal No.	Terminal name	I/O	Function
1	FSW	O	Time constant switching output of output filter of spindle motor
2	MON	O	ON/OFF control output of spindle motor
3	MDP	O	Drive output of spindle motor. Rough speed control in CLV-S mode and phase control in CLV-P mode
4	MDS	O	Drive output of spindle motor. Speed control in CLV-P mode
5	EFM	I	EFM signal input from RF amplifier
6	ASY	O	Output for controlling the slice level of EFM signal
7	LOCK	O	Samples the GFS signal with WFCK/16, and outputs "H" when the level is high When it is "L" for eight times, in arrow, outputs "L"
8	VCOO	O	VCO output. f = 8.6436 MHz when locked to EFM signal
9	VCOI	I	VCO input
10	TEST	I	(0 V)
11	PDO	O	Phase comparison output of EFM signal and VCO/2
12	V_{SS}	—	GND (0 V)
13	CLK	I	Serial data transmission clock input from CPU. Data is latched at rising edge of a clock
14	XLT	I	Latch input from CPU. Data (serial data from CPU) from the 8 bit shift register is latched in each register
15	DATA	I	Serial data input from CPU
16	XRST	I	System reset input. Reset at "L"
17	CNIN	I	Input of tracking pulse
18	SENS	O	Output of internal status in correspondence to the address
19	MUTG	I	Muting input. In the case when ATTM of internal register A is "L" Normal status when MUTG is "L" or soundless state when it is "H"
20	CRCF	O	Output of result of CRC check of sub code Q
21	EXCK	I	Clock input for sub code serial output
22	SBSO	O	Sub code serial output
23	SUBQ	O	Sub code Q output
24	SCOR	O	Sub code sync S0 + S1 output
25	SQCK	I/O	Sub code Q read-off clock
26	SQEX	I	SQCK select input
27	DOTX	O	DIGITAL OUT output. (Outputs the $\overline{WFCK}$ signal when CXD1130Q or D0 is off)
28	GFS	O	Display output of frame sync lock status
29	DB08	I/O	Data pin of external RAM. DATA8 (MSB)
30	DB07	I/O	Data pin of external RAM. DATA7
31	DB06	I/O	Data pin of external RAM. DATA6
32	DB05	I/O	Data pin of external RAM. DATA5
33	V_{DD}	—	Power supply (+5 V)
34	DB04	I/O	Data pin of external RAM. DATA4
35	DB03	I/O	Data pin of external RAM. DATA3
36	DB02	I/O	Data pin of external RAM. DATA2
37	DB01	I/O	Data pin of external RAM. DATA1 (LSB)
38	RA01	O	Address output of external RAM. ADDR01 (LSB)
39	RA02	O	Address output of external RAM. ADDR02
40	RA03	O	Address output of external RAM. ADDR03
41	RA04	O	Address output of external RAM. ADDR04
42	RA05	O	Address output of external RAM. ADDR05
43	RA06	O	Address output of external RAM. ADDR06

CIRCUIT DESCRIPTION

Terminal No.	Terminal name	I/O	Function
44	RA07	O	Address output of external RAM. ADDR07
45	RA08	O	Address output of external RAM. ADDR08
46	RA09	O	Address output of external RAM. ADDR09
47	RA10	O	Address output of external RAM. ADDR10
48	RA11	O	Address output of external RAM. ADDR11 (MSB)
49	RAWE	O	Write Enable signal output to external RAM. (Active at "L").
50	RACS	O	Chip select signal output to external RAM. (Active at "L").
51	C4M	O	Crystal dividing output. f= 4.2336 MHz.
52	Vss	—	GND (0 V).
53	XTAI	I	Crystal oscillator input. f=8.4672 MHz or 16.9344 MHz depending on the mode selected.
54	XTAO	O	Crystal oscillator output. f=8.4672 MHz or 16.9344 MHz depending on the mode selected.
55	MD1	I	Mode select input 1.
56	MD2	I	Mode select input 2.
57	MD3	I	Mode select input 3.
58	SLOB	I	Audio data output code select input. 2's complement output when "L", offset binary output when "H"
59	PSSL	I	Audio data output mode select input. Serial output when "L", parallel output when "H"
60	APTR	O	Aperture compensation control output. "H" when R-ch.
61	APTL	O	Aperture compensation control output. "H" when L-ch.
62	DA01	O	DA01 (parallel audio data LSB) output when PSSL = "H", C1F1 output when PSSL = "L".
63	DA02	O	DA02 output when PSSL = "H", C1F2 output when PSSL = "L".
64	DA03	O	DA03 output when PSSL = "H", C2F1 output when PSSL = "L".
65	DA04	O	DA04 output when PSSL = "H", C2F2 output when PSSL = "L".
66	DA05	O	DA05 output when PSSL = "H", C2FL output when PSSL = "L".
67	DA06	O	DA06 output when PSSL = "H", C2PO output when PSSL = "L".
68	DA07	O	DA07 output when PSSL = "H", RFCK output when PSSL = "L".
69	DA08	O	DA08 output when PSSL = "H", WFCK output when PSSL = "L".
70	DA09	O	DA09 output when PSSL = "H", $\overline{\text{PLCK}}$ output when PSSL = "L".
71	DA10	O	DA10 output when PSSL = "H", UGFS output when PSSL = "L".
72	DA11	O	DA11 output when PSSL = "H", GTOP output when PSSL = "L".
73	VDD	—	Power supply (+5 V).
74	DA12	O	DA12 output when PSSL = "H", RAOV output when PSSL = "L".
75	DA13	O	DA13 output when PSSL = "H", C4LR output when PSSL = "L".
76	DA14	O	DA14 output when PSSL = "H", $\overline{\text{C21O}}$ output when PSSL = "L".
77	DA15	O	DA15 output when PSSL = "H", C21O output when PSSL = "L".
78	DA16	O	DA16 (parallel audio data MSB) output when PSSL = "H", DATA output when PSSL = "L".
79	WDCK	O	Strobe signal output. 176.4 kHz when DF is ON, 88.2 kHz with CXD1125Q or when DF is OFF.
80	LRCK	O	Strobe signal output. 88.2 kHz when DF is ON, 44.1 kHz with CXD1125Q or when DF is OFF.

Notes:

C1F1 :, C1F2 : Error correction status monitor output for C1 decode.

C2F1 :, C2F2 : Error correction status monitor output for C2 decode.

C2FL : Correction status output. Goes "H" when the currently corrected C2 series data cannot be corrected.

C2PO : C2 pointer signal. Synchronized to the audio data output.

RFCK : Read frame clock output. 7.35 MHz when locked to the crystal line.

WFCK : Write frame clock output. 7.35 MHz when locked to the crystal line.

$\overline{\text{PLCK}}$: VCO/2 output. f=4.3218 MHz when locked to the EFM signal.

UGFS : Non-protected frame sync pattern output.

GTOP : Frame sync protect status display output.

RAOV : ±4 frame jitter absorption RAM overflow and underflow display output.

C4LR : Strobe signal. 352.8 kHz when DF is ON, 176.4 kHz with CXD1125Q or when DF is OFF.

$\overline{\text{C21O}}$: C21O invert output.

C21O : Bit clock output. 4.2336 MHz when DF is ON, 2.1168 MHz with CXD1125Q or when DF is OFF.

DATA : Audio signal serial data output.

MECHANISM OPERATION DESCRIPTION

Figure 1 illustrates the positional relationship of the mechanism in the STOP mode. The position of each switch with the tray closed is as follows:

S1	Clamp UP switch	OFF
S2	Tray CLOSE switch	ON
S3	Clamp END switch	ON
S4	Tray OPEN switch	OFF

Note: The figure in ( ) following a parts name occurring in the drawing below is the same as in the exploded view of the service manual.

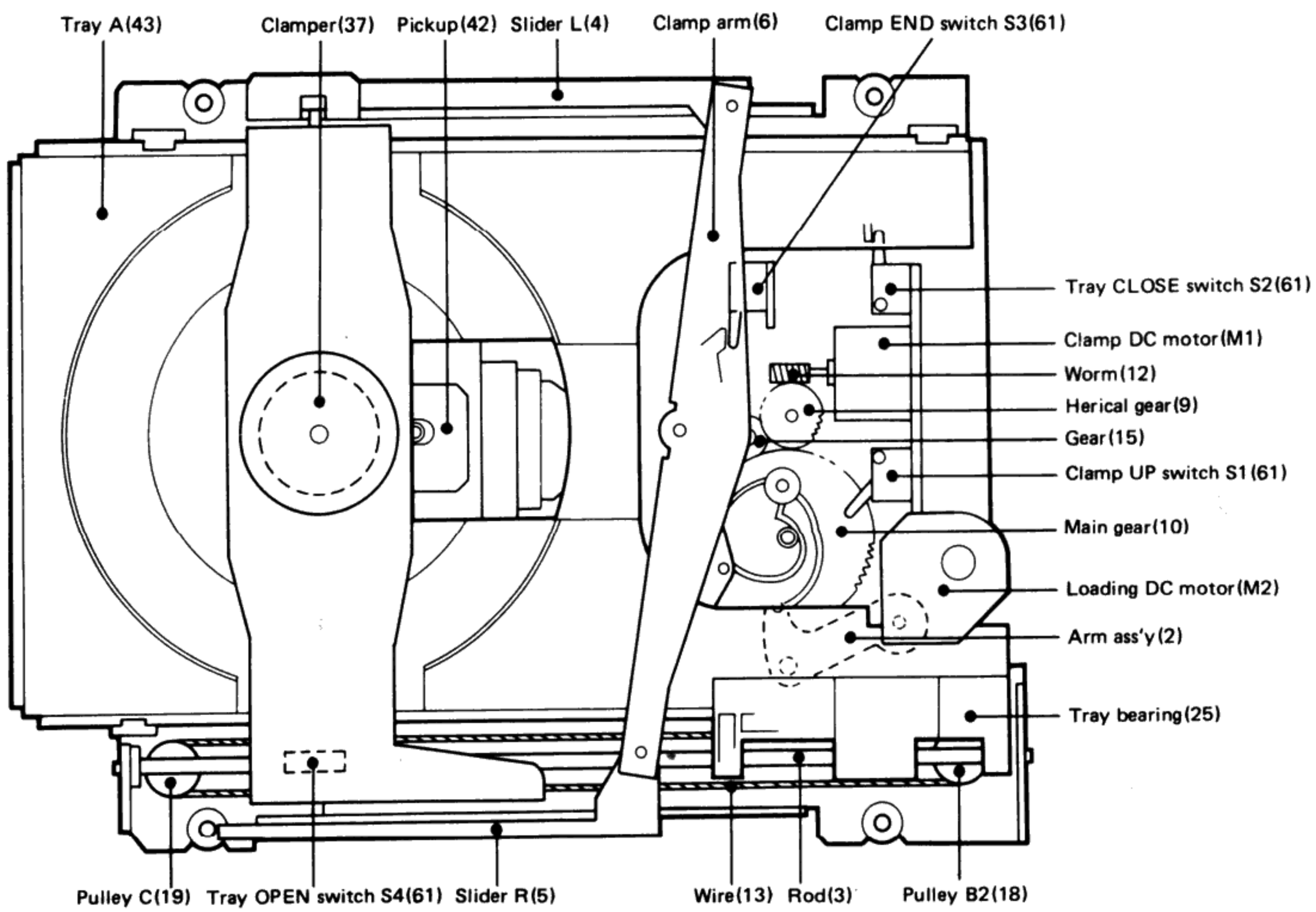

Fig. 1 Tray CLOSE status (as viewed perspectively from above)

MECHANISM OPERATION DESCRIPTION

1. Tray OPEN operation

When the OPEN/CLOSE key is pressed, an "H" signal is output from the pin 33 of the microprocessor. This signal is then amplified by IC105 (2/2), Q107 and Q108 and input to the mechanism.

At first, the clamp DC motor (M1) thus rotates in the direction of an arrow (❶). Further, the main gear rotates in the direction of an arrow (❷) by an intermediate gear (Figure 2).

A groove as shown in Figures 3 and 4 exists in the lower side of the main gear. The arm ass'y moves along this groove to control the tray OPEN/CLOSE operation (Figure 3).

Figure 4 shows the position of the main gear with the tray opened.

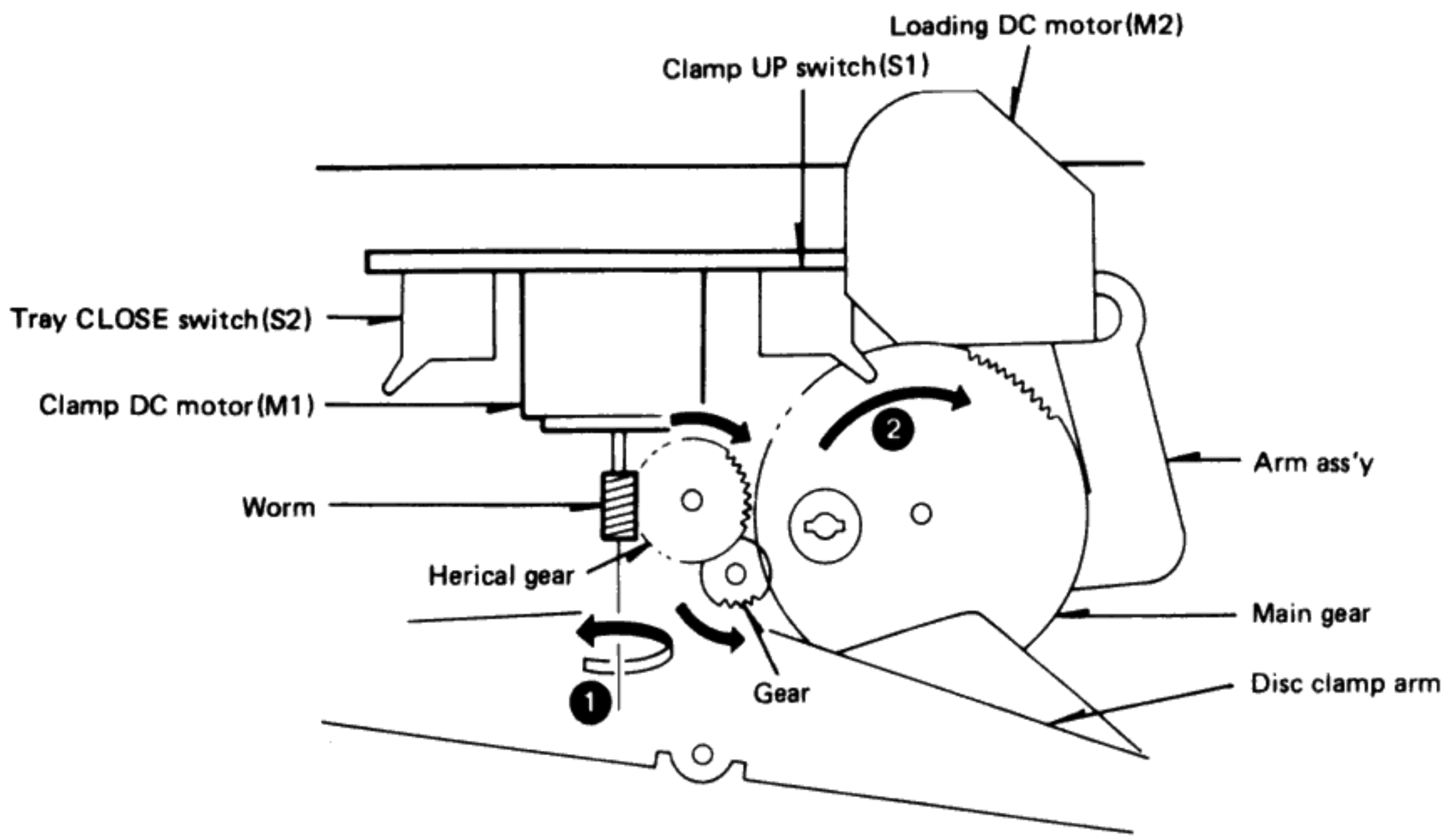

Fig. 2 Tray OPEN operation (1)

Due to the rotation in the direction of an arrow, the position of the arm ass'y moves in the direction of the broken line and comes to the location as shown in Fig. 4. (At CLOSE, it moves in the reverse direction.)

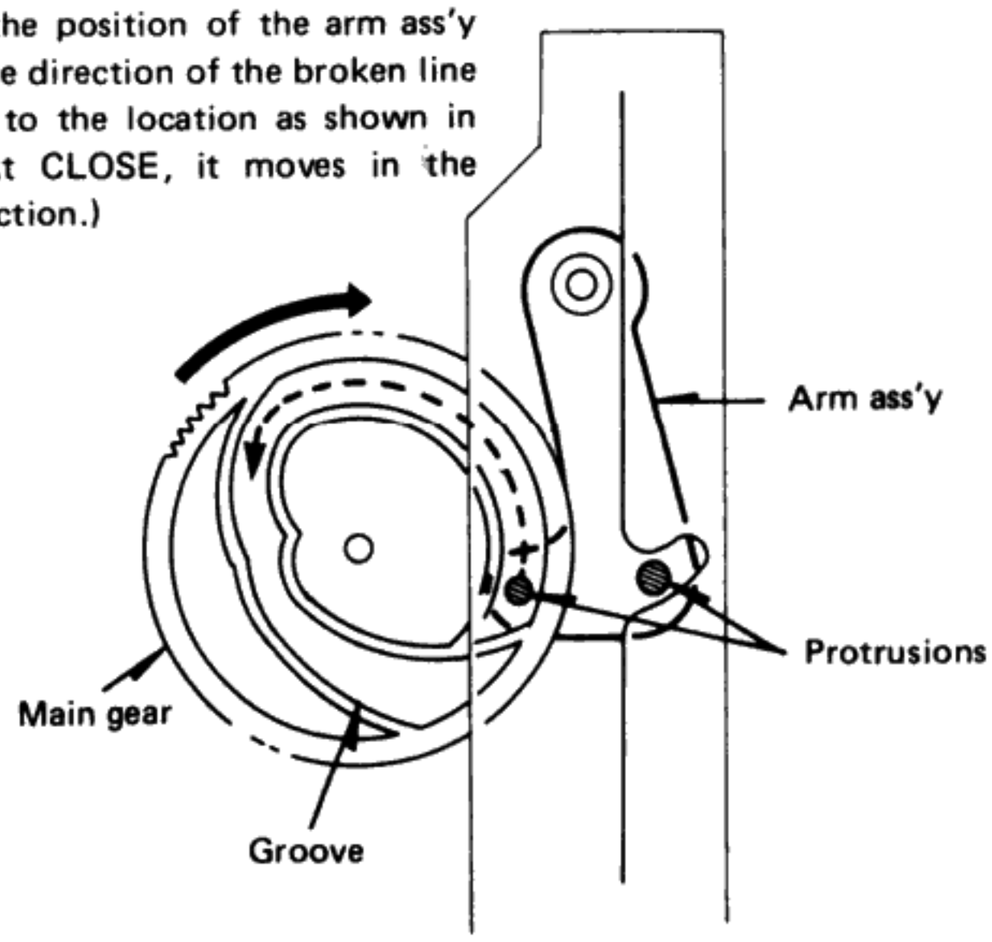

Fig. 3 Position relationship between arm ass'y andmain gear with tray closed (as viewed perspectively from above the main gear)

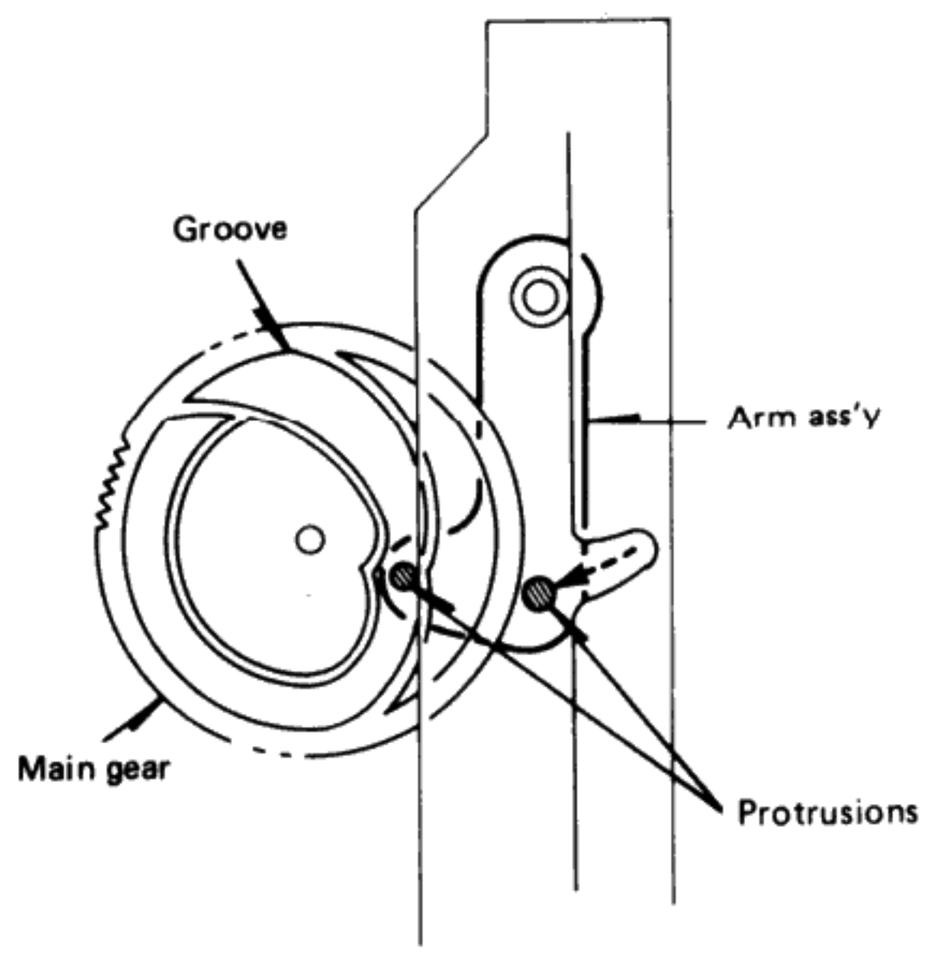

Fig. 4 Rear of main gear when tray opens

A similar groove is given in the upper side of the main gear. Along this groove, control is made over the clamp switch and the clamp mechanism. From the positional status with the tray closed as shown in Figure 3, when the clamp DC motor (M1) rotates in the direction of an arrow as indicated before, the protrusion placed at the lower side of the disc clamp arm is led in the direction of an arrow (❸) along the groove of the main gear. Thereby, the disc clamp arm is rotated in the direction of an arrow (❹) (Figure 5).

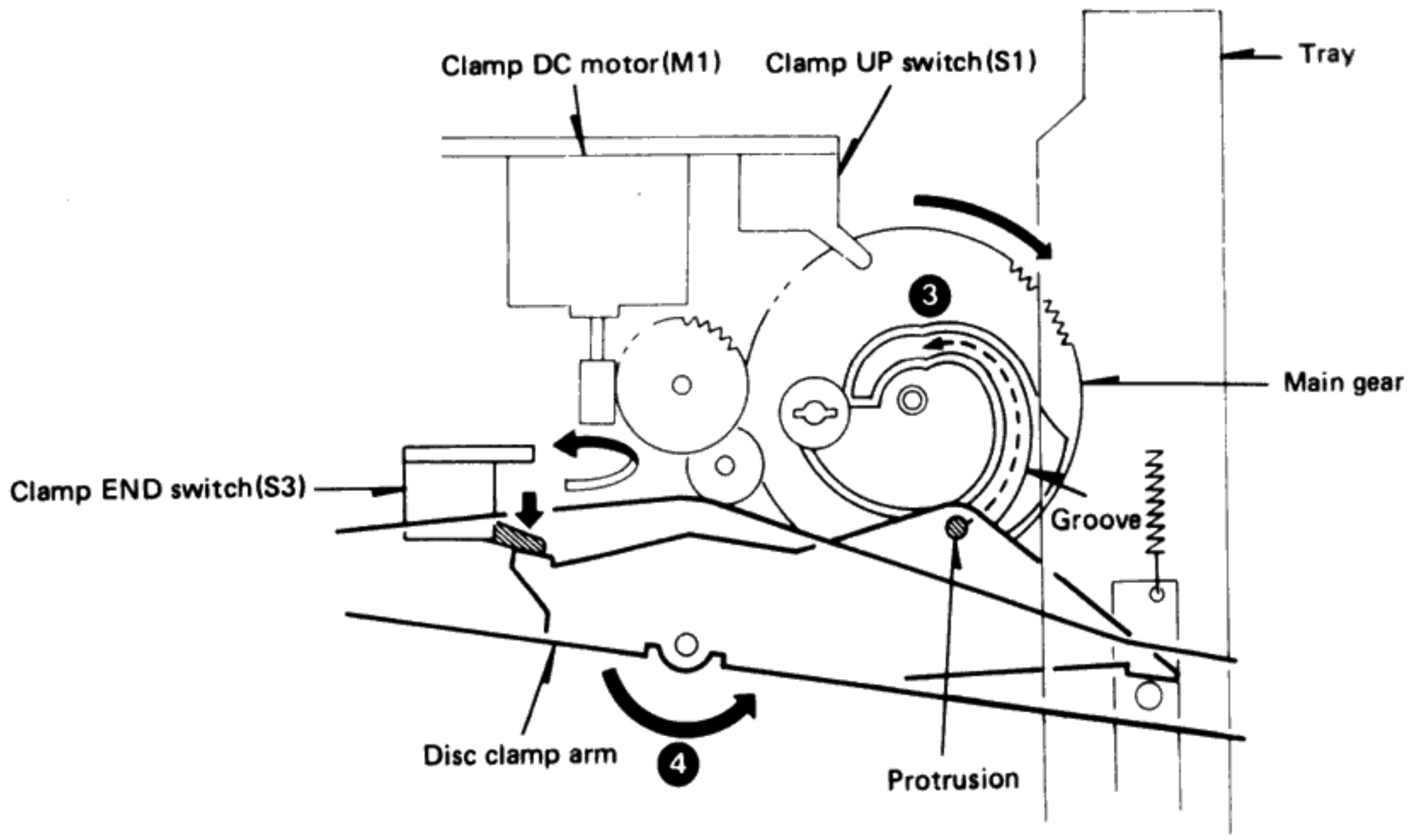

Fig. 5 Tray OPEN operation (2)

In addition, the top ends of the disc clamp arm are moved in the direction of an arrows (❺) in response to the slider mechanism in order to raise and lower the disc clamper (Figure 6).

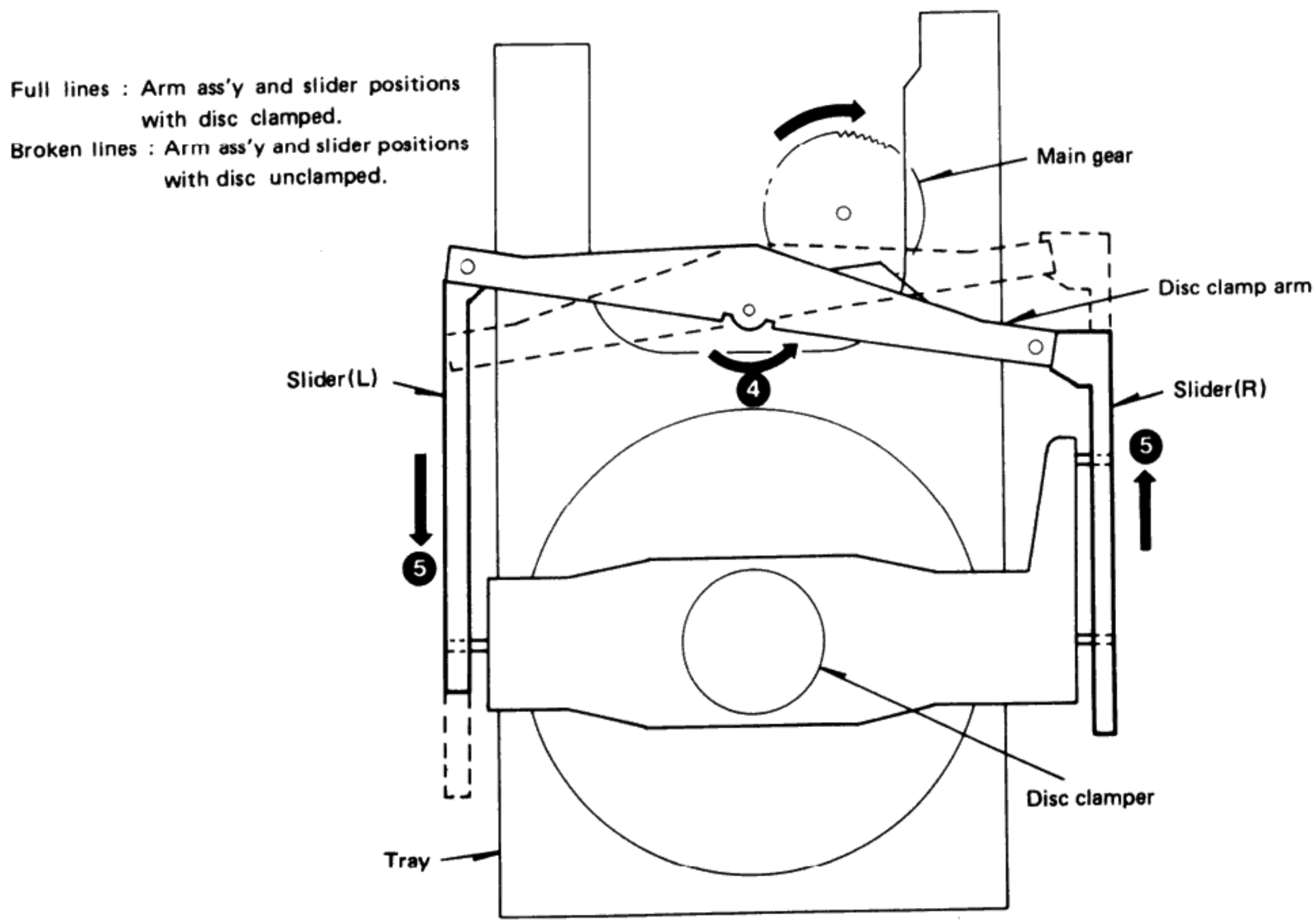

Fig. 6 Tray clamper UP/DOWN operation (1)

MECHANISM OPERATION DESCRIPTION

At this time, the tray is raised and lowered by the bent portion at the right lower side of the disc clamp arm. Figures 8 and 9 are the illustration on the process that the disc clamp arm moves in the direction of an arrow (❹), the protrusion of the tray is released backwards by a spring and the tray rises entirely.

The left and right sliders are provided with slits as shown Figure 7, along which the left and right pins attached to the disc clamp arm slide up to unclamp. At this time, the disc clamp arm with the disc clamper fully raised is positioned with its left side down as opposed to the previous clamp position. (Figures 6, 7 and 8)

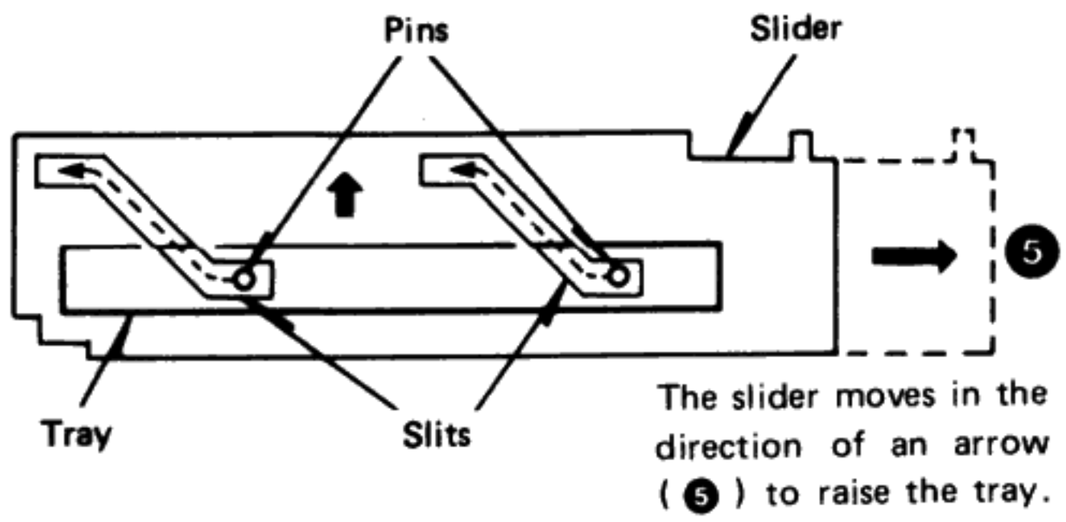

Fig. 7 Tray clamper UP/DOWN operation (2) (Side slider section)

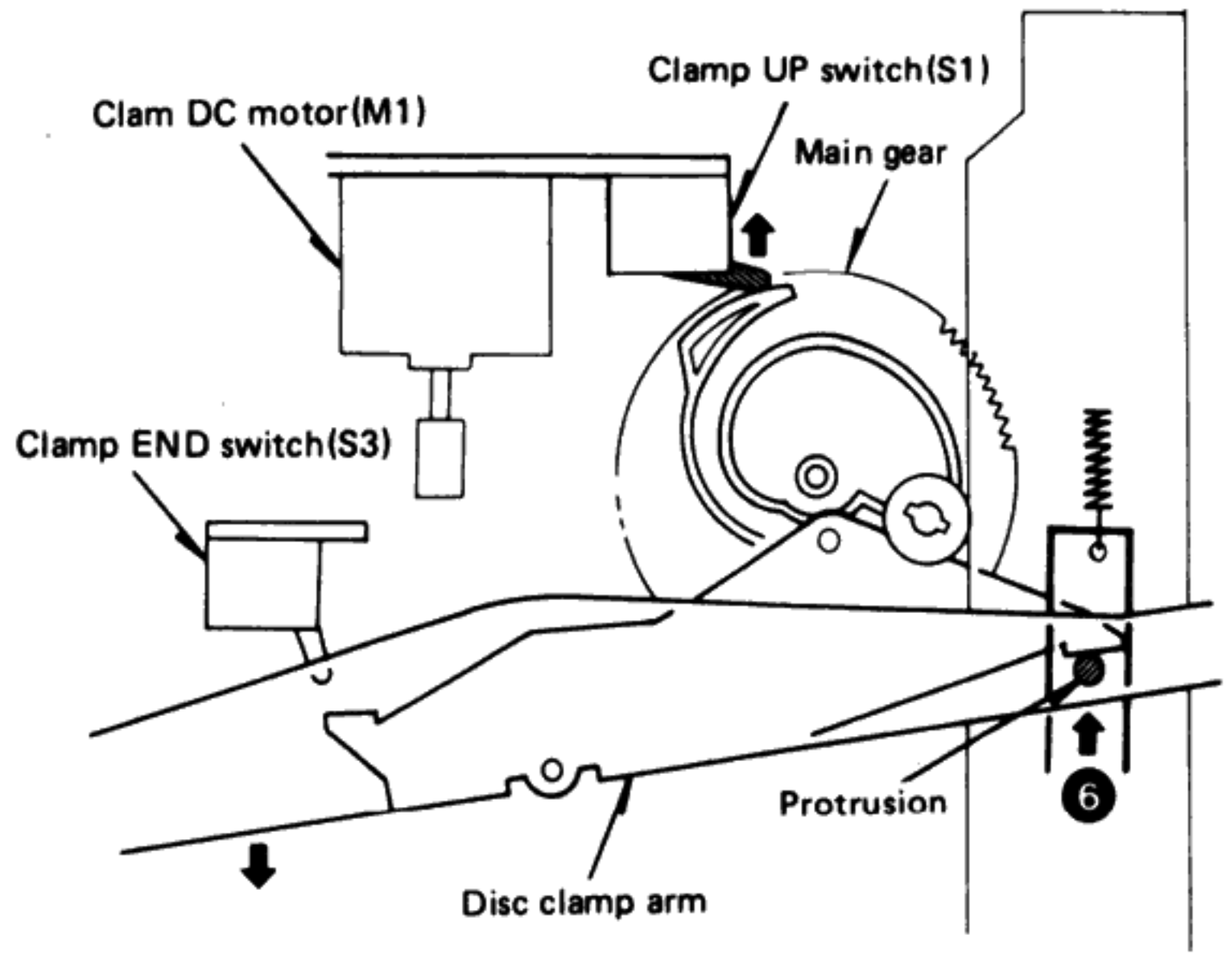

Normally, when the disc is clamped, the spring is expanded. Thus, it moves in the direction of an arrow (❻) with the arm movement.

Fig. 8 Clamp UP switch (S1) ON and unclamping

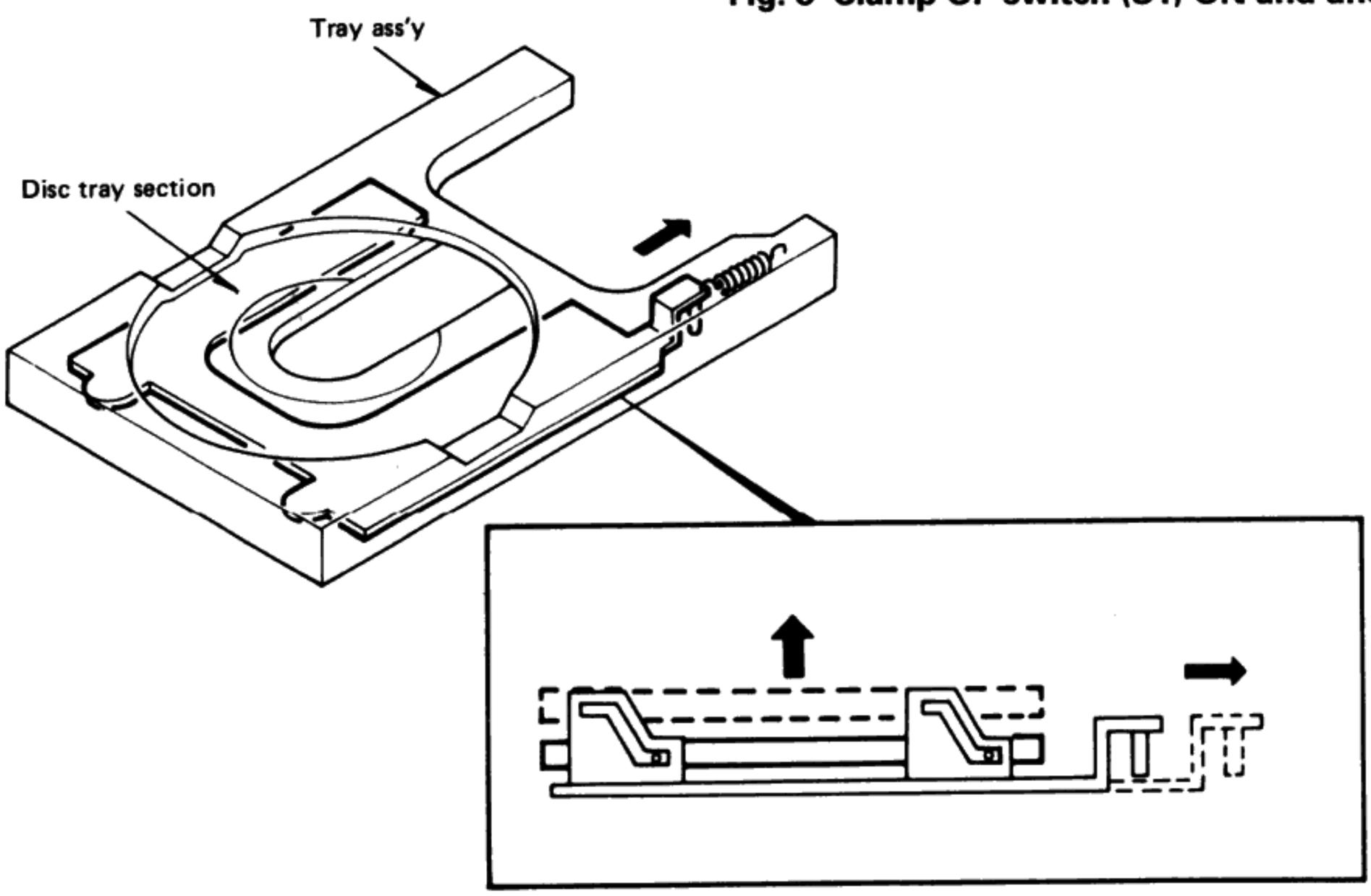

Fig. 9 Disc tray section UP/DOWN operation

MECHANISM OPERATION DESCRIPTION

Subsequently, S1 (clamper UP switch) turns ON by the groove at the upper side of the main gear, and the loading DC motor (M2) rotates in the direction of an arrow (❼) to pull the wire via the belt (Figure 10).

As shown in Figure 11, a foot is given under the tray bearing by which the tray is installed to the rod. This foot works to turn ON/OFF S4 (tray OPEN switch). The loading DC motor (M2) rotates until S4 is turned ON by this foot to open the tray.

Note: The tray CLOSE operation is reverse to the tray OPEN operation in respect to the operational sequence. Therefore, the description of the tray CLOSE operation is here omitted.

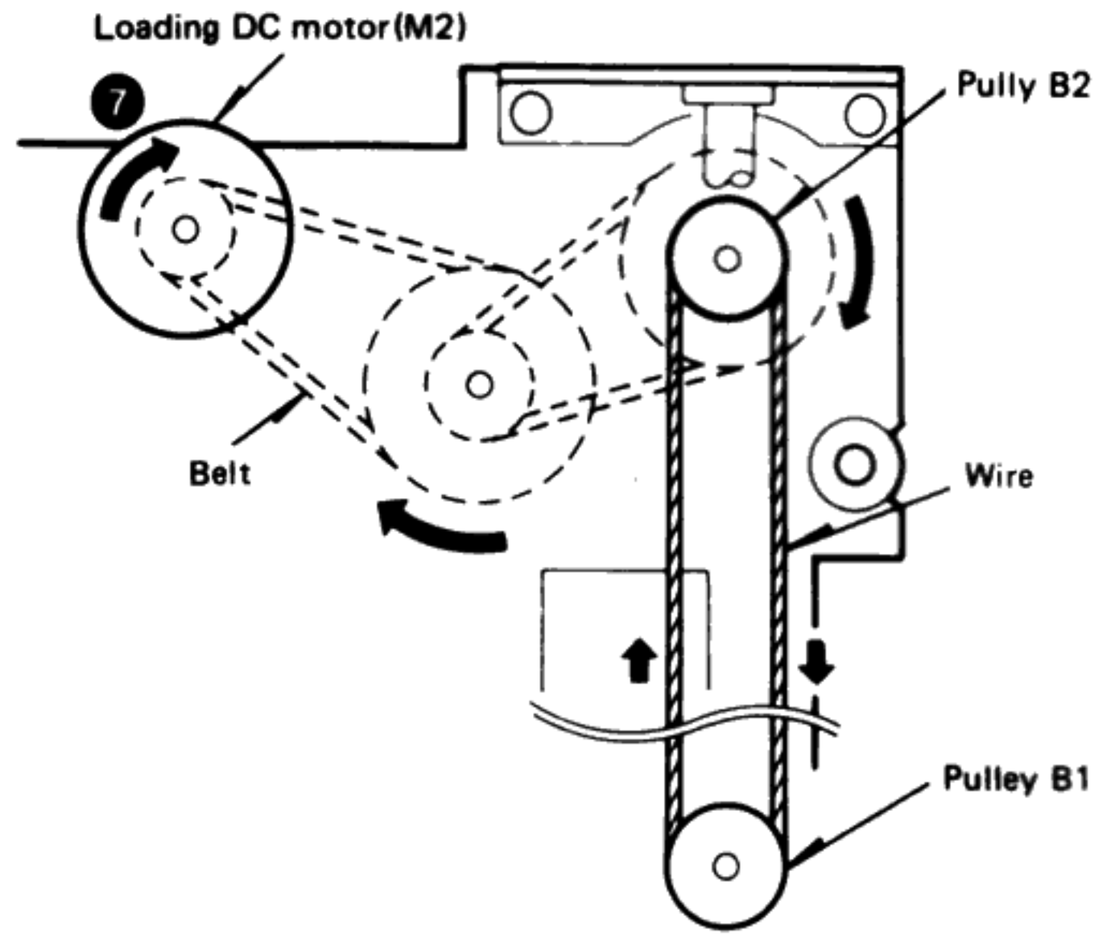

Fig. 10 Tray OPEN operation (3)

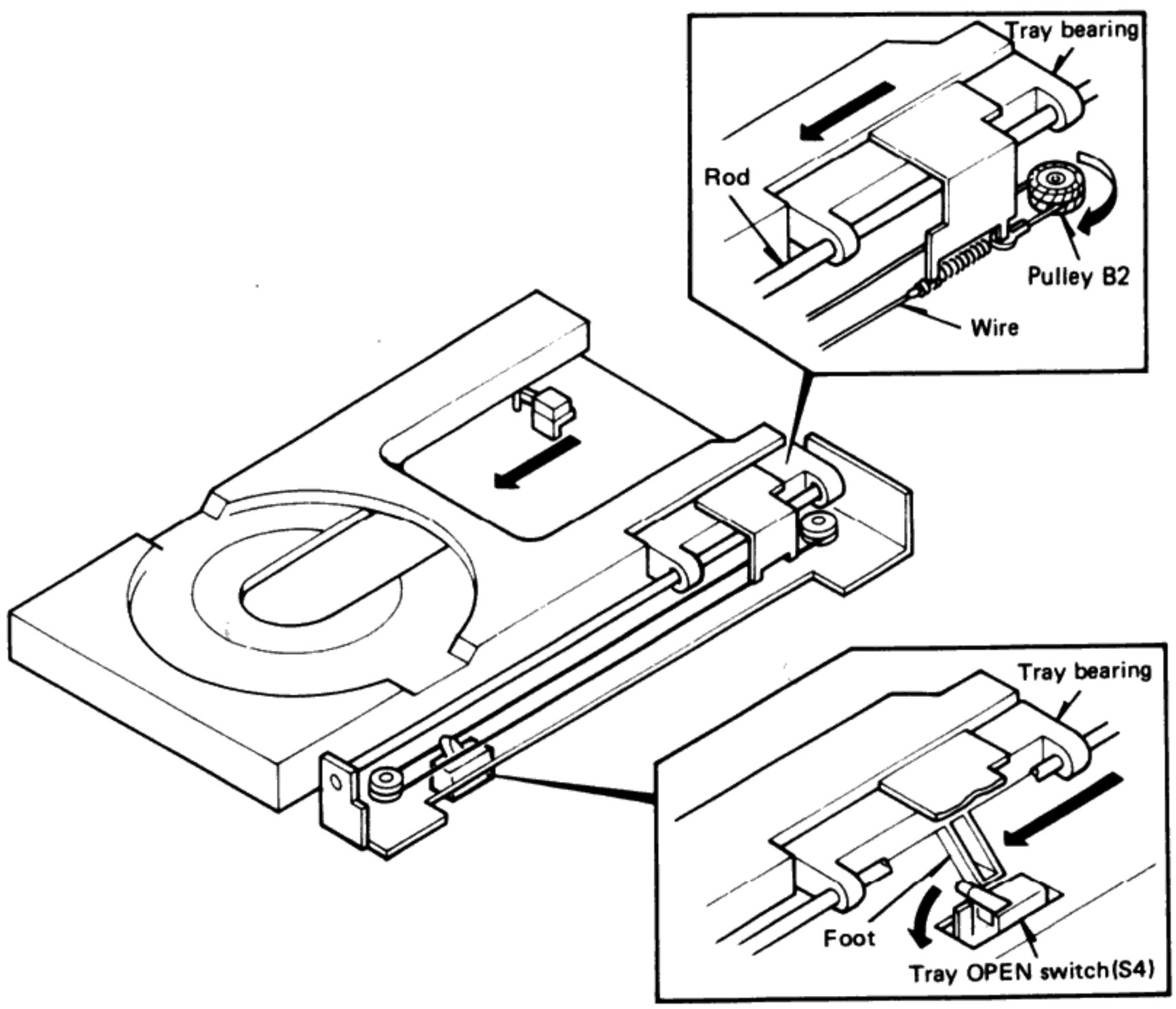

Fig. 11 Tray OPEN operation (4)

ADJUSTMENT

No.	ITEM	INPUT SETTING	OUTPUT SETTING	PLAYER SETTING	ALIGNMENT POINT	ALIGN FOR	FIG
1	LASER POWER	–	Apply the sensor section of the optical power meter on the pickup lens.	Short pins TEST to enter the test mode. Press the REPEAT key, and the tray will be opened and the LD emits light.	–	When the power is from 0.35mW, RF level is 1.0Vp-p or more, TE (servo open) is 2.0Vp-p or more and the diffraction grating is aligned correctly, the pickup is acceptable.	(a)
2	VCO	–	Connect a frequency counter between pin 4 (PLCK) and pin 5(GND). (X32-1310)(B/2)	Turn off the power once, and turn on the power again. Stop mode	L10 (X32-1310)	4.30MHz	(b)
3	DIFFRACTION GRATING	Test disc Type 4	Connect an oscilloscope as follows. CH1: RF (X29-1960 CN2 pin 4) CH2: TE (X32-1310 pin 3)	Short pins TEST to enter the test mode. Next, short pins 8 and 9 beside pins TEST. Then, confirm that the display is " 03 ".	–	Check that the diffraction grating is correctly aligned. (The diffraction grating cannot be adjusted.)	(c)
4	TRACKING ERROR BALANCE	Test disc Type 4	Connect an oscilloscope as follows. CH1: RF (X29-1960 CN2 pin 4) CH2: TE (X32-1310 pin 3)	Short pins TEST to enter the test mode. Next, short pins 8 and 9 beside pins TEST. Then, confirm that the display is " 03 ".	TE BALANCE VR1 (X29-1960)	Symmetry between upper and lower patterns, or DC=0±0.05V	(d)
5	FOCUS ERROR BALANCE	Test disc Type 4	Connect an oscilloscope as follows. CH1: RF (X29-1960 CN2 pin 4) CH2: FE (X32-1310 pin 1)	Press the PLAY key, and confirm that the display is" 05 ".	FE BALANCE VR2 (X29-1960)	Optimum eye pattern	(e)
6	FOCUS GAIN	Test disc Type 4 Apply signal of 1.4kHz, 0.5Vrms to CN4 pin 2. (X32-1310)	Use a servo jig, or connect an oscilloscope or AC voltmeter to pin 1 of CN4 via a 47kΩ, 470pF LPF. (X32-1310)	Turn off the power once, and turn on the power again. Press the PLAY key.	FOCUS GAIN VR3 (X29-1960)	50mVrms	(f)
7	TRACKING GAIN	Test disc Type 4 Apply signal of 1.4kHz, 0.5Vrms to CN4 pin 4. (X32-1310)	Use a servo jig, or connect an oscilloscope or AC voltmeter to pin 5 of CN4 via a 47kΩ, 470pF LPF. (X32-1310)	PLAY	TRACKING GAIN VR4 (X29-1960)	50mVrms	(f)

(Note) Type 4 disc: SONY YEDS-18 Test Disc or equivalent.

REGLAGE

N°	ITEM	REGLAGE D'ENTREE	REGLAGE DE SORTIE	REGLAGE DE LA LECTURE	POINT D'ALIGNEMENT	ALIGNEMENT POUR	FIG
1	PUISSANCE LASER	–	Appliquer la section détecteur du compteur de puissance optique sur la lentille du capteur.	Court-circuiter les broches TEST pour entrer en mode test. Presser la touche REPEAT et le tiroir s'ouvria et la diode émet de la lumière.	–	Quand l'alimentation est de 0,35mW, le niveau RF de 1,0Vc-c ou plus. TE (asservissement ouvert) de 2,0Vc-c ou plus et le réseau de diffraction aligné correctement, le capteur est acceptable.	(a)
2	VCO	–	Raccoder un compteur de fréquence entre la broche 4(PLCK) et la broche 5(GND). (X32-1310)(B/2)	Couper l'alimentation, puis la refournir. Mode d'arrêt	L10 (X32-1310)	4,30MHz	(b)
3	RESEAU DE DIFFRACTION	Disque test Type 4	Raccorder un oscilloscope comme suit. CH1: RF (X29-1960 CN2 broche 4) CH2: TE (X32-1310 broche 3)	Court-circuiter les broches TEST pour entrer en mode de test. Ensuite court-circuiter les broches 8 et 9 à côté des broches TEST. S.assurer ensuite que l'affichage est "03".	–	Vérifier que le réseau de diffraction est correctement aligné. (Le réseau de diffraction ne peut pas être ajusté.)	(c)
4	BALANCE D'ERREUR D'ALIGNEMENT	Disque test Type 4	Raccorder un oscilloscope comme suit. CH1: RF (X29-1960 CN2 broche 4) CH2: TE (X32-1310 broche 3)	Court-circuiter les broches TEST pour entrer en mode de test. Ensuite court-circuiter les broches 8 et 9 à côté des broches TEST. S.assurer ensuite que l'affichage est "03".	TE BALANCE VR1 (X29-1960)	Symétrie entre les formes supérieure et inférieure ou DC=0±0,05V	(d)
5	BALANCE D'ERREUR DE MISE AU POINT	Disque test Type 4	Raccorder un oscilloscope comme suit. CH1: RF (X29-1960 CN2 broche 4) CH2: FE (X32-1310 broche 1)	Presser la touche PLAY et s'assurer que l'affichage est " 05 ".	FE BALANCE VR2 (X29-1960)	Forme optimum	(e)
6	GAIN DE MISE AU POINT	Disque test Type 4 Appliquer un signal de 1,4kHz, 0,5Vrms à CN4 broche 2. (X32-1310)	Utiliser un gabarit d'asservisement ou raccorder un oscilloscope ou un voltmètre CC à la broche 1 de CN4 via un FPB dc 47kΩ, 470pF.(X32-1310)	Couper l'alimentation puis la refournir Presser la touche PLAY.	GAIN DE MISE AU POINT VR3 (X29-1960)	50mVrms	(f)
7	GAIN D'ALIGNEMENT	Disque test Type 4 Appliquer un signal de 1,4kHz, 0,5Vrms à CN4 broche 4. (X32-1310)	Utiliser un gabarit d'asservisement ou raccorder un oscilloscope ou un voltmètre CC à la broche 5 de CN4 via un FPB de 47kΩ, 470pF.(X32-1310)	PLAY	GAIN D'ALIGNEMENT VR4 (X29-1960)	50mVrms	(f)

(Remarque)Disque de type 4:Disque test SONY YEDS-18 ou équivalent.

ABGLEICH

NR.	GEGENSTAND	EINGANGS-EINSTELLUN	AUSGANGS-EINSTELLUNGE	SPIELER-EINSTELLUNG	ABGLEICH-PUNKT	ABGLEICHUNG	ABB.
1	LASERLEISTUNG	–	Das Sensorteil des optischen Leistungmeters auf die Aufnehmerlinse ansetzen.	Die Stifte TEST kurzschließen, um den Testmodus zu aktivieren. Die REPEAT-Taste drücken, dann öffnet sich der Träger, und die LD gibt Licht ab.	–	Wenn bei einer Spannung von 0,35mW der RF-Pegel 1,0Vs-s oder mehr, TE (Servo-Offen) 2,0Vs-s beträgt und das Beugungsgitter richtig ausgerichtet ist, ist der Abtaster in Ordnung.	(a)
2	VCO	–	Einen Frequenzzähler zwischen Stift 4(PLCK) und Stift 5(GND) anschließen. (X32-1310)(B/2)	Die Spannungsversorgung einmal ausschalten und dann wieder einschalten. Stop-Betriebsart	L10 (X32-1310)	4,30MHz	(b)
3	OPTISCHES GITTER	Testdisc Typ 4	Ein Oszilloskop wie folgt anschließen: Kanal 1: RF (X29-1960 CN2 Stift 4) Kanal 2: TE (X32-1310 Stift 3)	Die Stifte TEST kurzschleißen, um den Testmodus zu aktivieren. Dann die Stifte 8 und 9 neben den Stiften TEST kurzschließen. Anschließend sicherstellen, daß " 03 " angezeigt wird.	–	Prüfen, ob das Beugungsgitter richtig ausgerichtet ist.(Das Beugungsgitter kann nicht eingestellt werden.)	(c)
4	SPURHALTEFEHLER-AUSGLEICH	Testdisc Typ 4	Ein Oszilloskop wie folgt anschließen: Kanal 1: RF (X29-1960 CN2 Stift 4) Kanal 2: TE (X32-1310 Stift 3)	Die Stifte TEST kurzschleißen, um den Testmodus zu aktivieren. Dann die Stifte 8 und 9 neben den Stiften TEST kurzschließen. Anschließend sicherstellen, daß " 03 " angezeigt wird.	TE BALANCE VR1 (X29-1960)	Symmetrie zwischen oberen und unteren Mustern oder Gleichstrom DC=0±0,05V	(d)
5	FOKUS-FEHLERAUSGLEICH	Testdisc Typ 4	Ein Oszilloskop wie folgt anschließen: Kanal 1: RF (X29-1960 CN2 Stift 4) Kanal 2: FE (X32-1310 Stift 1)	Die PLAY-Taste drücken und prüfen, daß " 05 " auf dem Display angezeigt wird.	FOKUS-FEHLERAUSGLEICH VR2 (X29-1960)	Optimales Augenmuster	(e)
6	FOKUSVERSTÄRKUNG	Testdisc Typ 4 Ein Signal von 1,4kHz, 0,5Vrms an CN6 Stift 2 anlegen. (X32-1310)	Eine Servo-Lehre verwenden oder ein Oszilloskop oder einen Wechselstrom-Voltmeter an Stift 1 von CN4 über ein 47kΩ, 470pF Tiefpaßfilter anschließen. (X32-1310)	Die Spannungsversorgung einmal ausschalten und dann wieder einschalten. Die PLAY-Taste drücken.	FOKUSVERSTÄRKUNG VR3 (X29-1960)	50mVrms	(f)
7	SPURHALTE-VERSTÄRKUNG	Testdisc Typ 4 Ein Signal von 1,4kHz, 0,5Vrms an CN6 Stift 4 anlegen. (X32-1310)	Eine Servo-Lehre verwenden oder ein Oszilloskop oder einen Wechselstrom-Voltmeter an Stift 5 von CN4 über ein 47kΩ, 470pF Tiefpaßfilter anschließen. (X32-1310)	PLAY	APURHALTE-VERSTÄRKUNG VR4 (X29-1960)	50mVrms	(f)

(Hinweis) Typ 4 Disc: SONY YEDS-18 Testdisc oder Äquivalent.

ADJUSTMENT/REGLAGE/ABGLEICH

DIFFRACTION GRID ADJUSTMENT/REGLAGE DU RESEAU DE DIFFRACTION/BEUGUNGSGITTER-EINSTELLUNG

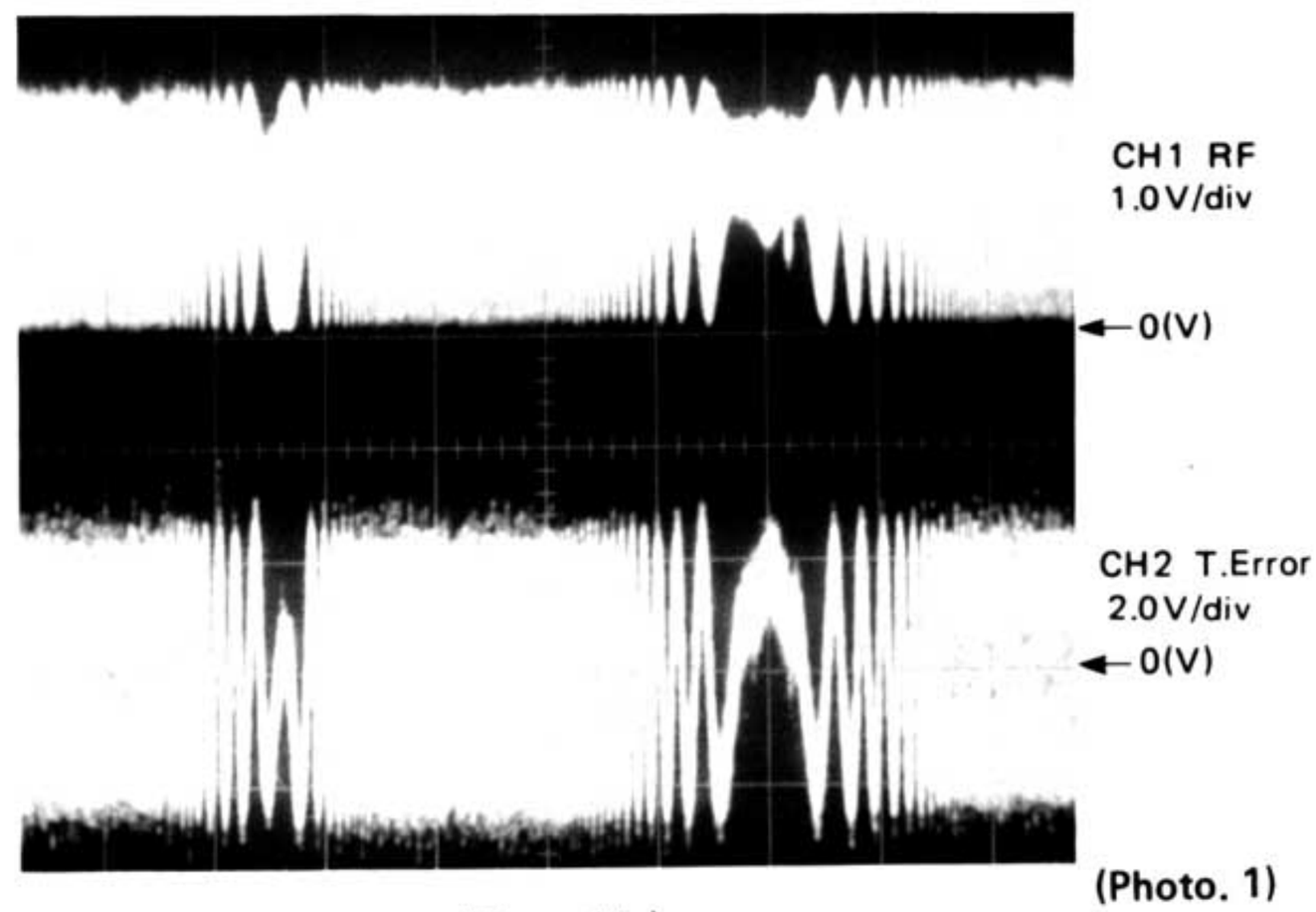

(Photo. 1)
(Photo. 1)
(Foto. 1)

- RF signal and T.Error signal after diffraction grating adjustment.
- Signal RF et signal T.Error après ajustement de réseau de diffraction.
- RF-Signal und T.Error-Signal nach Diffraktions-gitter-Einstellung.

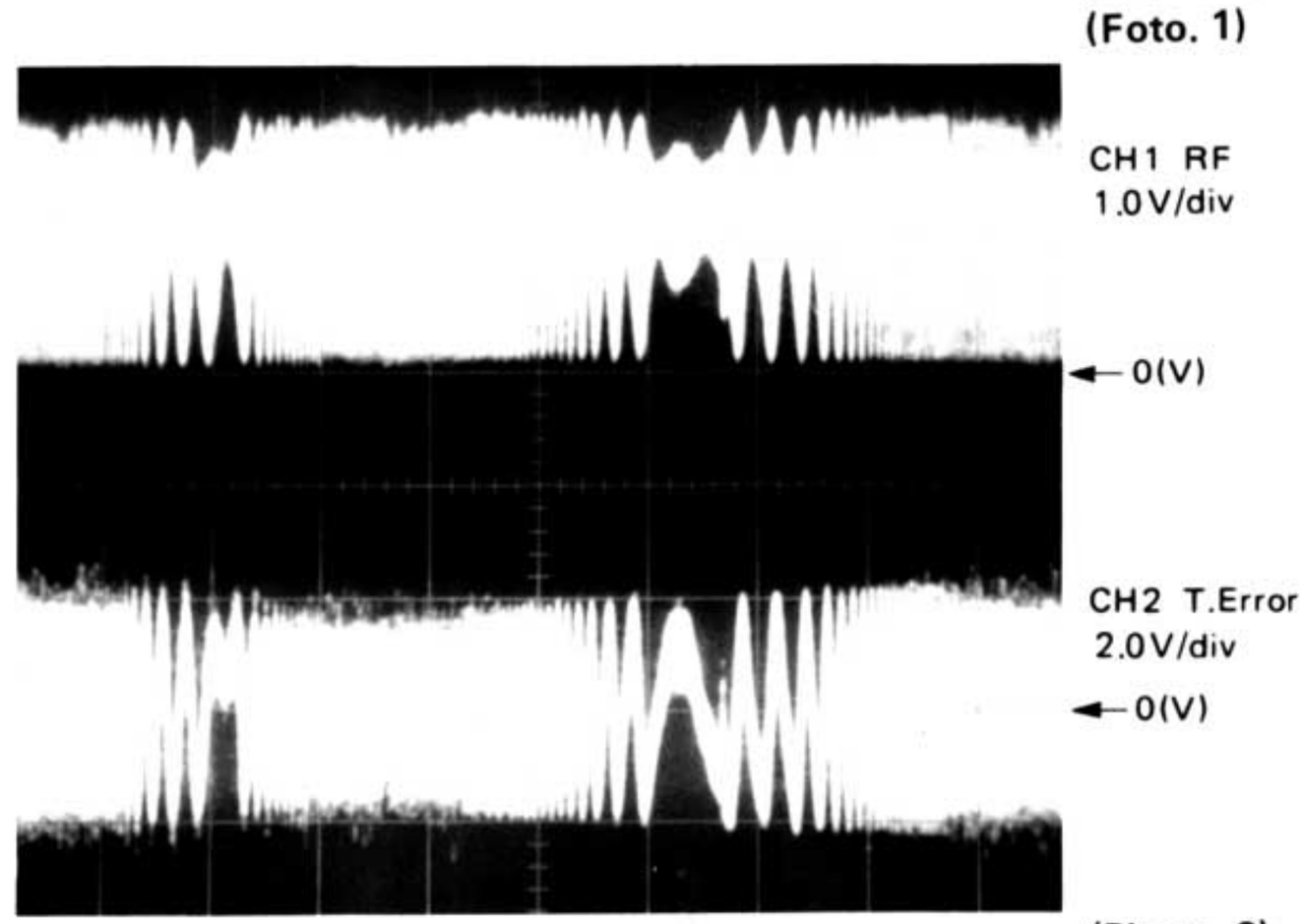

(Photo. 2)
(Photo. 2)
(Foto. 2)

- RF signal and T.Error signal when there is small diffraction grating position error.
- The T.Error signal level is small, and the envelope is as shown in the diagram below.
- Signal RF et signal T.Error quand il y a une petite erreur de position du réseau de diffraction.
- Le niveau de signal T.Error est petit et l'envelope est telle qu'indiquée dans le diagramme ci-dessous.
- RF-Signal und T.Error-Signal bei kleinem Diffraktions-gitter-Positionierungsfehler.
- Der T.Error-Signalpegel ist klein, und die Hüll-kurve ist wie in der Abbildung unten.

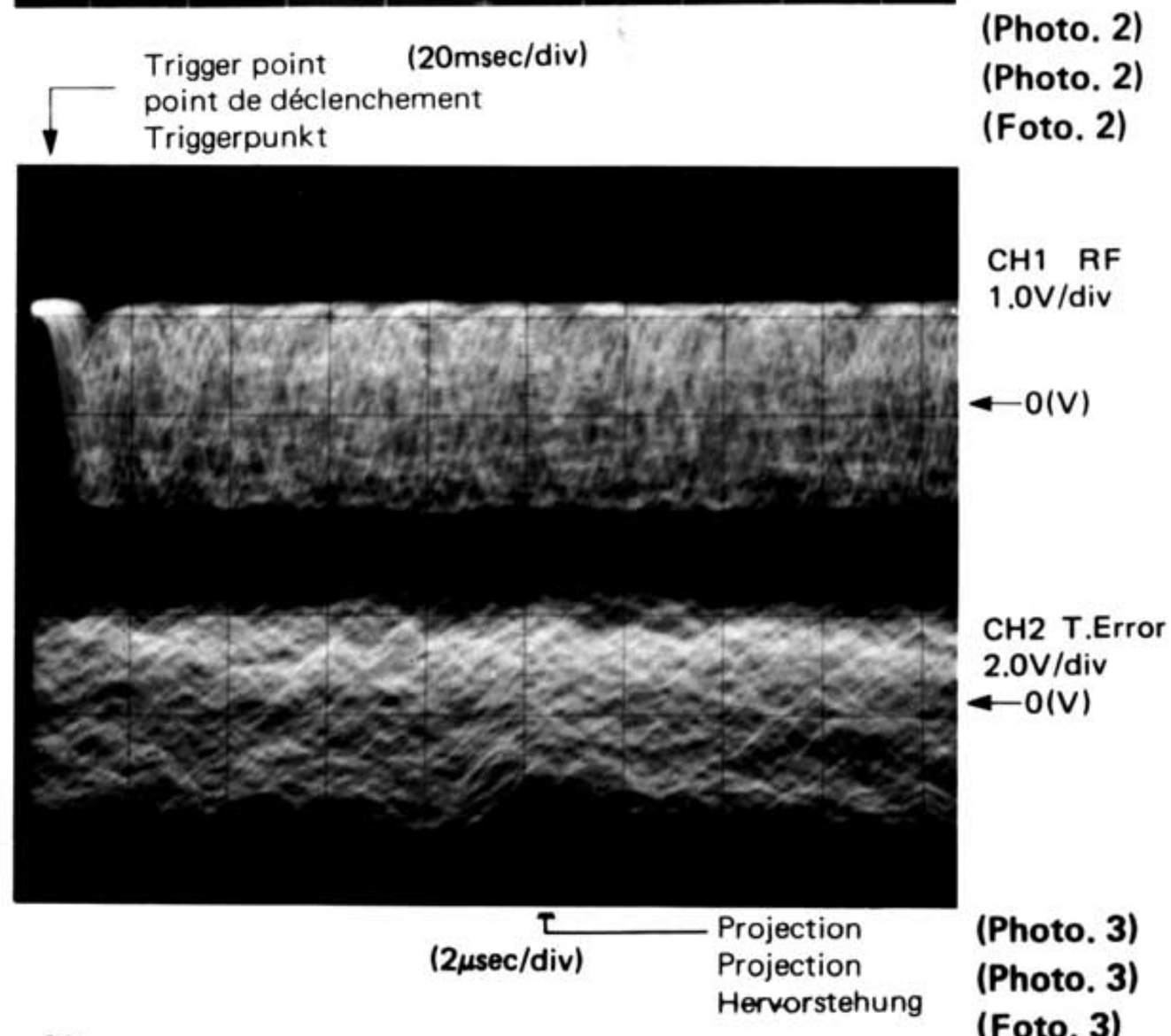

(Photo. 3)
(Photo. 3)
(Foto. 3)

- RF signal and T.Error signal in test mode (with focusing ON).
- When the sub-beam traces the same bit series as the main beam during diffraction grating adjustment, bringing the RF trigger point to the position shown in the Photo causes a "projection" to be observies in the T.Error waveform.
- Le signal RF et le signal T.Error en mode de test (avec la mise au point sur ON).
- Quand un faisceau auxiliaire tracela même série de bits que le faisceau principal pendant l'ajustement de réseau de diffraction, l'apport du point de déclenchement RF à la position indiquée dans la photo provoque une "projection" qui s'observe dans la forme d'onde d' T.Error.
- RF-Signal und T.Error-Signal im Testmodus (bei eingeschalteter Fokussierung).
- Wenn der Nebenstrahl die gleiche Bitreihe wie der Hauptstrahl während der Diffraktionsgitter-Einstellung verfolgt und den RF-Triggerpunkt auf die im Foto gezeigte Position bringt, wird eine "Hervorstehung" verursacht, die in der T.Error-Wellenform beobachtet werden kann.

ADJUSTMENT/REGLAGE/ABGLEICH

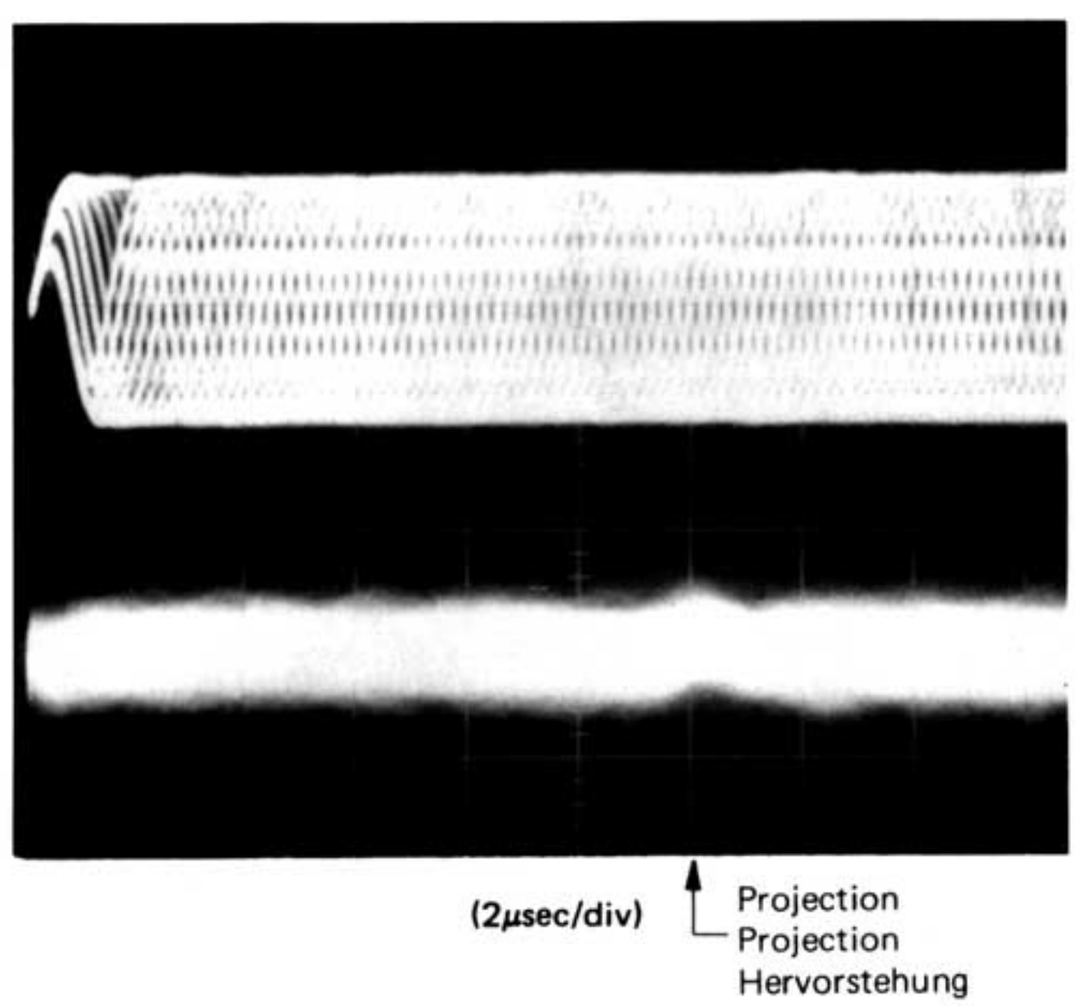

(Photo. 4)
(Photo. 4)
(Foto. 4)

- RF signal and E.Spot signal in test mode (PLAY).
- If the diffraction grating has been adjusted properly, the influence of triggering is observed on the E.Spot waveform of approx. 12μs after RF signal, in the form of a projection.
- Signal RF et signal E.Spot en mode de test (PLAY).
- Si le réseau de diffraction a été ajusté correctement, l'influence du déclenchement s'observe sur la forme d'onde E.Spot d'environ 12μs après le signal RF, sous la forme d'une projection.
- RF-Signal und E.Spot-Signal im Testmodus (PLAY).
- Wenn das Diffraktionsgitter richtig eingestellt wurde, wird der Einfluß des Triggers in der E.Spot-Wellenform etwa 12μs nach dem RF-Signal in der Form einer Hervorstehung beobachtet.

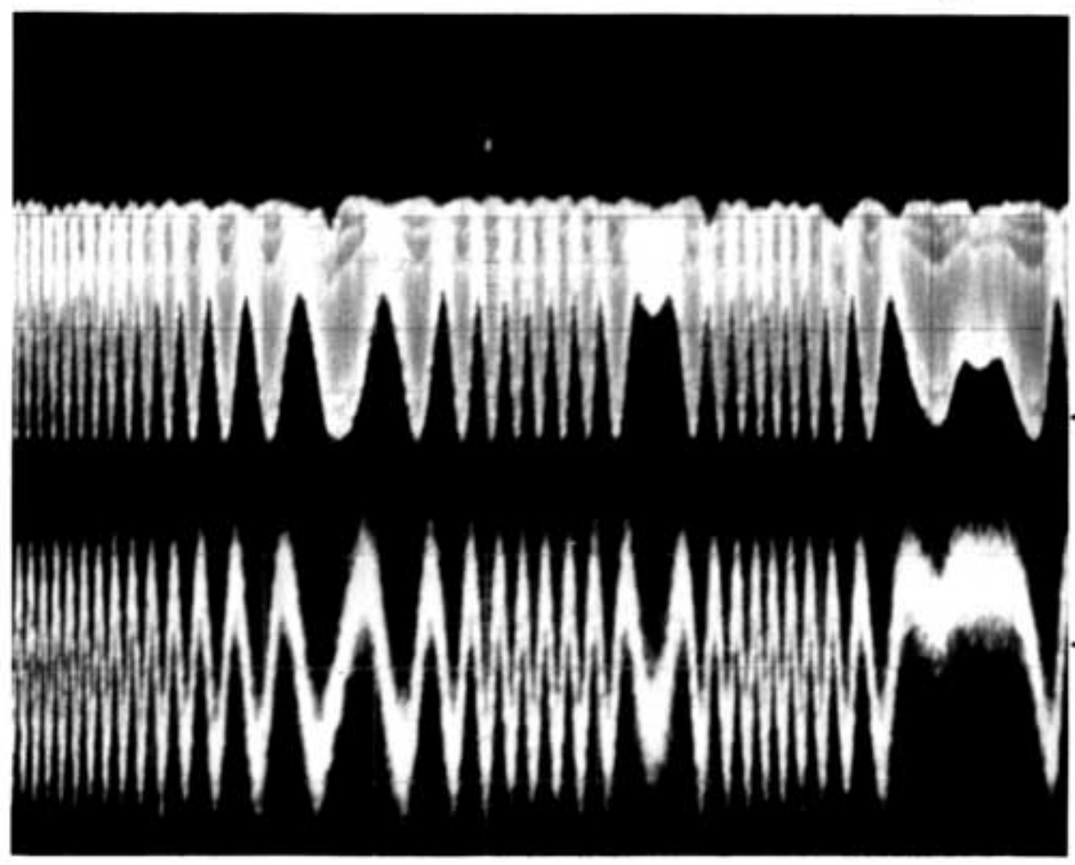

(Photo. 5)
(Photo. 5)
(Foto. 5)

- RF signal and T.Error signal; in test mode (Focusing ON). (Disc type 4)
- Adjust T.Error so that the waveform is symmetrical above and below 0V. (VR1 of X29-1960)
- Signal RF et signal T.Error; en mode test (mise au point ON). (Disque de type 4)
- Ajuster T.Error pour que la forme d'onde soit symétrique en-dessus et au-dessous de 0V. (VR1 de X29-1960)
- RF-Signal und T.Error-Signal; im Testmodus (Fokussierung eingeschaltet). (Disc-Typ 4)
- T.Error so einstellen, daß die Wellenform über und unter 0V symmetrisch ist. (VR1 von X29-1960)

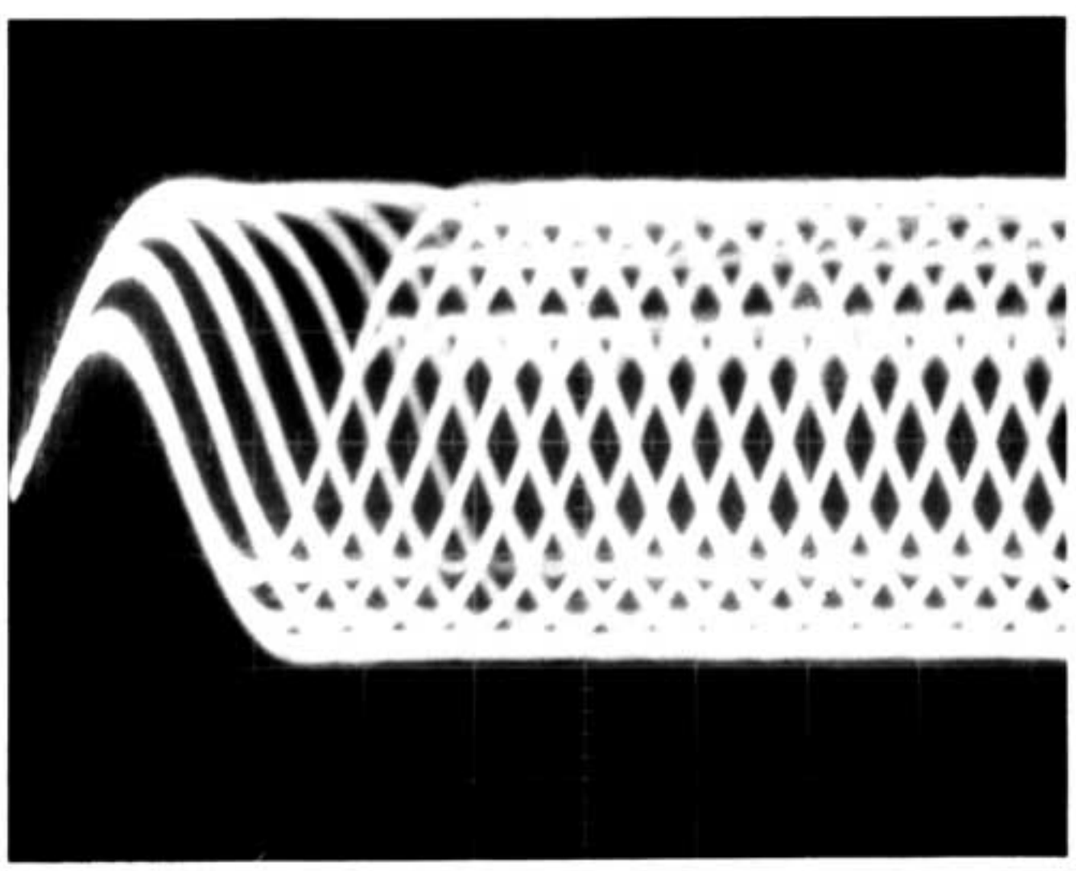

(Photo. 6)
(Photo. 6)
(Foto. 6)

- RF signal in test mode (PLAY).
- Perform the tangential and focusing offset adjustments so that each of the center cross points are focused into one point on the display. The crossing points above and below the center shall also be displayed clearly.
- Signal RF en mode de test (PLAY).
- Effectuer les ajustements d'offset tangentiel et de mise au point pour que chacun des points de croisement central soit mis au point sur un point de l'affichage. Les points de croisement au-dessus et en-dessous du centre doivent aussi être affichés clairement.
- RF-Signal im Testmodus (PLAY).
- Die Tangential- und Fokusversatz-Einstellungen so durchführen, daß jeder der mittleren Kreuzungspunkte in einem Punkt auf dem Display fokussiert wird. Auch die Kreuzungspunkte über und unter der Mitte müssen klar angezeigt werden.

ADJUSTMENT/REGLAGE/ABGLEICH

(a) Laser Power

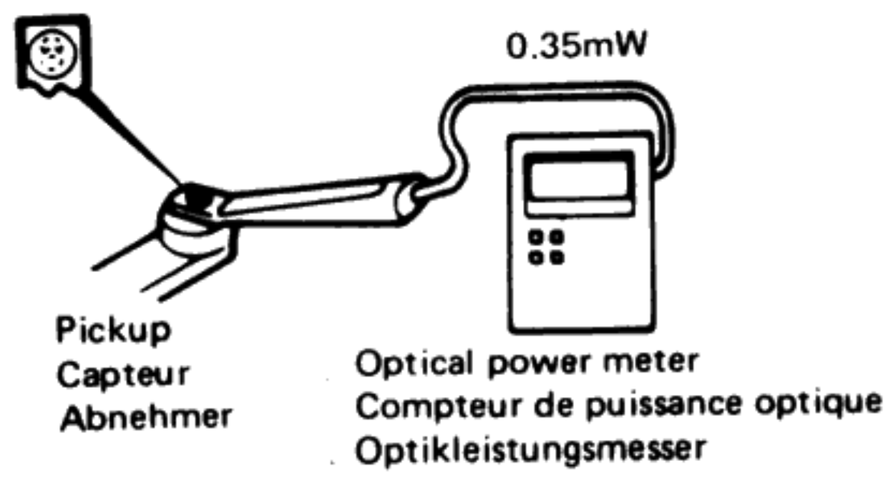

(f) Focus Gain and Tracking Gain

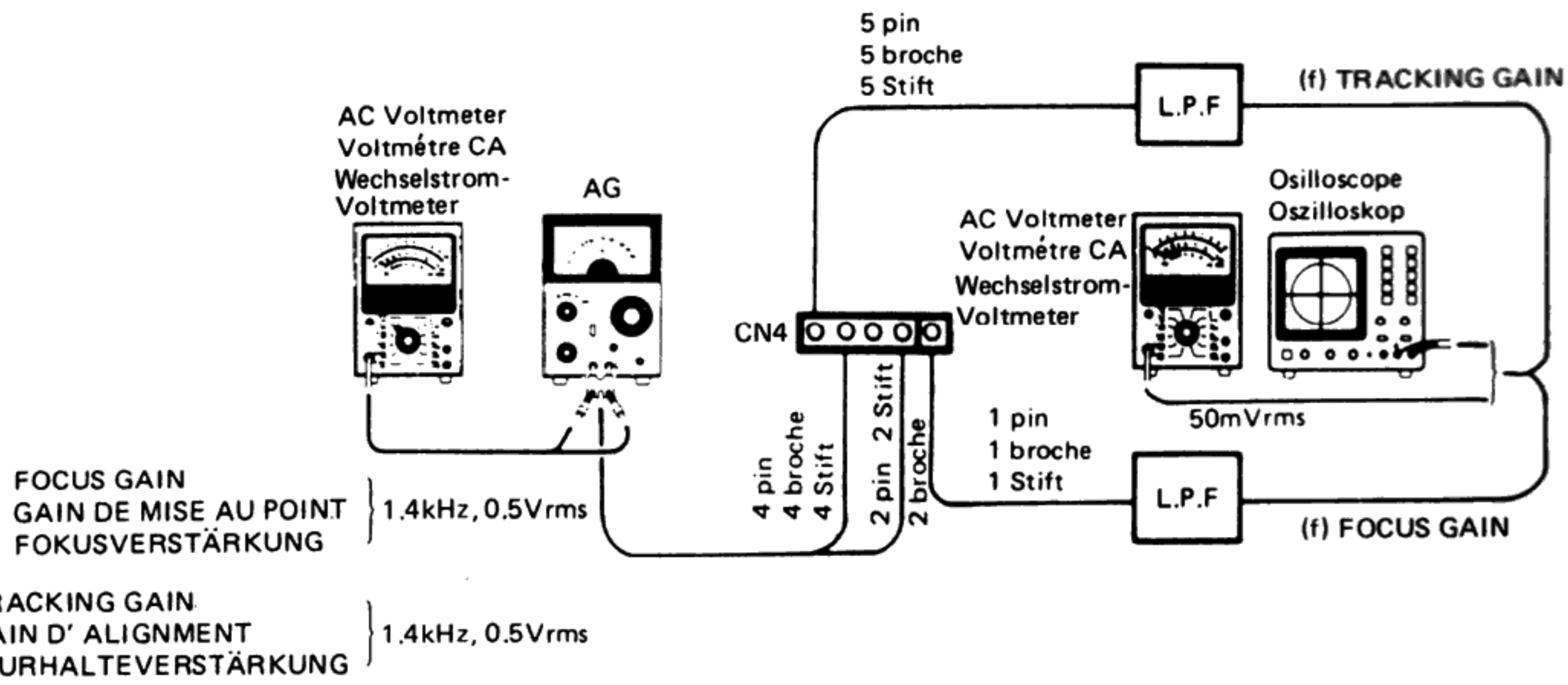

PC BOARD (COMPONENT SIDE VIEW)

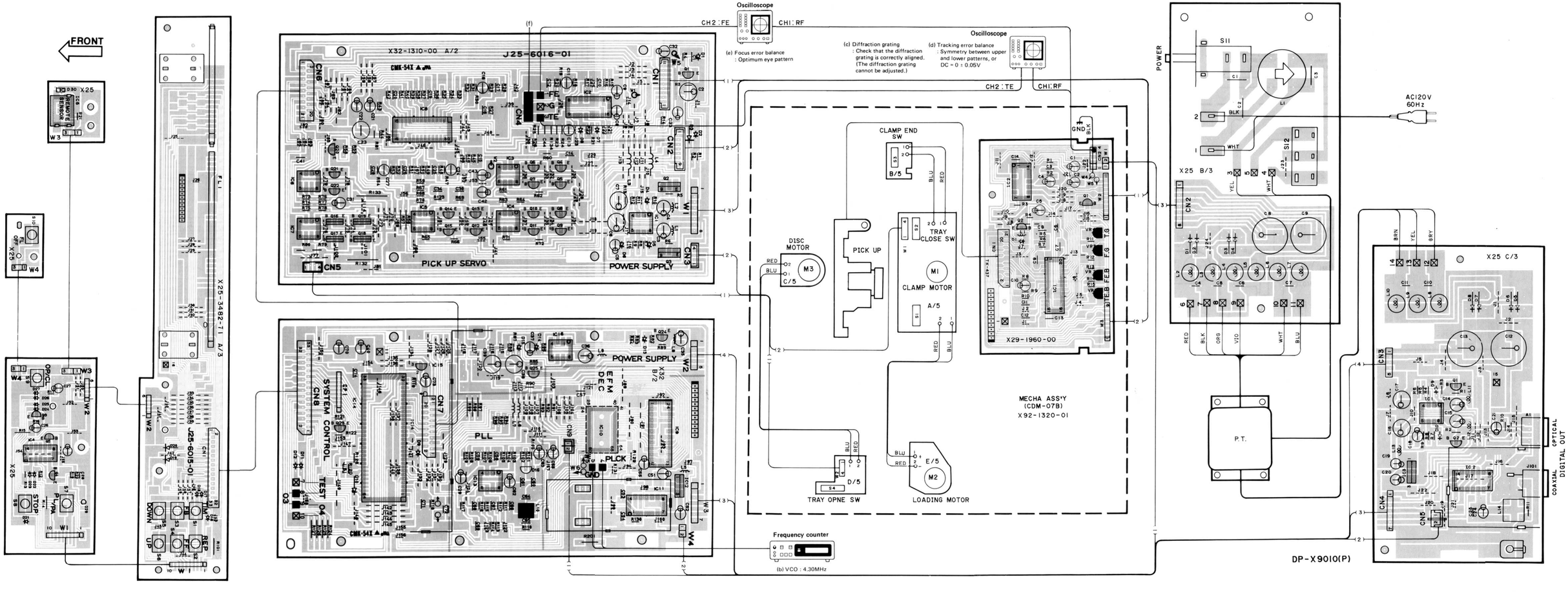

Refer to the schematic diagram for the values of resistors and capacitors.

(X32-1310-00)

IC1

1	–6.4V
2,3	0V
4	–10.8V
5,6	4.7V
7	1.0V
8	10.6V

IC2

1~4	0V
5	–4.6V(0V)
6	0V
7	–5.2V
8	0V
9	4.8V(0V)
10~15	0V
16	5.2V

IC3,4

1	0.6V
2,3	0V
4	–10.8V
5,6	0V
7	–0.6V
8	10.6V

IC5

1	0.5V
2,3	0V
4	–10.8V
5,6	0V
7	–0.7V
8	10.6V

IC6

1~3	0V
4	–10.8V
5,6	0V
7	0.5V
8	10.6V

IC7

1	–0.6V
2,3	0V
5,6	0V
7	0.6V

IC8

1~4	0V
5,6	5.0V(0V)
7~10	5.0V
11~13	0V
14	–4.2V
15	5.2V
16	0V
17	–5.2V
18	4.7V(0V)
19~25	0V
26	–5.1V
27~30	0V

IC9

1~5	2.6V
9,10	2.9V
11	0.7V
12	0V
13,14	0.7V
15	2.9V
16	2.3V
17	4.4V
18	2.4V
19	2.6V
20	2.4V
21	4.5V
22,23	2.6V
24	5.2V

IC10

1	0V
2	0V(5.2V)
3,4	0V(2.9V)
5,6	0V(2.6V)
7	0V(5.1V)
8,9	2.6V
10	0V
11	2.6V
12	0V
13~15	5.2V
16	5.0V
17	0V
18,19	5.2V(0V)
20	0V(5.1V)
21~24	0V
25	2.6V
26	0V
27	2.6V
28	0V(5.1V)
29~31	0.7V
32	2.9V
33	5.2V
34,35	2.9V
36	2.3V
37	4.4V
38~45	2.6V
49	4.5V
50	2.4V
51	2.0V
52	0V
53	2.4V
55,56	0V
57	5.2V
58,59	0V
69	2.6V
70	2.5V
73	5.2V

IC12

1	7.0V
2	0V
3	5.0V

IC13

1	0V
2,3	2.5V
4	–7.0V
5~7	0V
8	7.0V

IC14

5	5.1(0V)
6	2.5V
7	0V(1.5V)
8	5.1V
9	5.0V
10	0V
11	0V(4.6V)
12,13	0V(5.1V)
14	0V
15	5.1V
16	5.1V(0V)
17,18	0V
19	5.1V
20	0V
21~24	0V
25~27	5.1V
28	5.1V(0V)
29	0V
30	2.4V
31	–2.8V
32	0V
33	1.6V
34	2.4V
35~38	0V
39	5.0V
40~49	–26.0V
50,51	1.0V
52	–26.0V
53	0V
54	–20.9V
55	–16.0V
56	–28.5V
57	–8.0V
58	–18.4V
59	–9.0V
60,61	–28.0V
62,63	–11.3V
64	5.2V

IC15

1	5.2V
2	0V
3	5.0V

IC16

1	–7.1V
2,3	0V
4	–11.3V
5,6	4.7V
7	1.0V
8	10.3V

	B	C	E
Q1	–29.1V	–48.0V	–28.5V
Q2	–10.2V	–5.2V	–10.8V
Q3	5.8V	10.6V	5.2V
Q4	0.6V	–10.8V	0V
Q5	0.6V	10.6V	0V
Q6	–0.6V	–10.8V	0V
Q7	–0.6V	10.6V	0V
Q8	0.6V	–10.8V	0V
Q9	0.6V	10.6V	0V
Q10	–0.6V	–10.8V	0V
Q11	–0.6V	10.6V	0V
Q12	0.5V	10.6V	0V
Q13	0.5V	–10.8V	0V
Q14	–0.7V	–10.8V	0V
Q15	–0.7V	10.6V	0V
Q16,17	0.6V	–	0V
Q18,19	–0.6V	–	0V
Q20	0V	5.2V	0V
Q21	0.5V	–10.8V	0V
Q22	0.5V	10.6V	0V
Q23	–26.0V	5.2V	26.1V
Q24	–10.7V	–5.2V	–11.3V
Q25	5.8V	10.3V	5.2V

(X25-348X-XX)

IC1

1	–3.9V
2,3	0V
4	–11.3V
5,6	5.0V
7	1.0V
8	10.3V

IC2

2	2.6V
4	5.0V
7	0V
10	5.0V
12	2.6V
14	5.0V

IC3

1	7.0V
2	0V
3	5.0V

IC4

4	5.2V
7	0V
10	5.2V

IC5

1	0V
2	5.2V

	B	E	C
Q1	–10.7V	–7.0V	–11.3V
Q2	7.6V	10.3V	7.0V
Q3	–	–	–28.5V
Q4,5	–	–	5.2V

PC BOARD (FOIL SIDE VIEW)

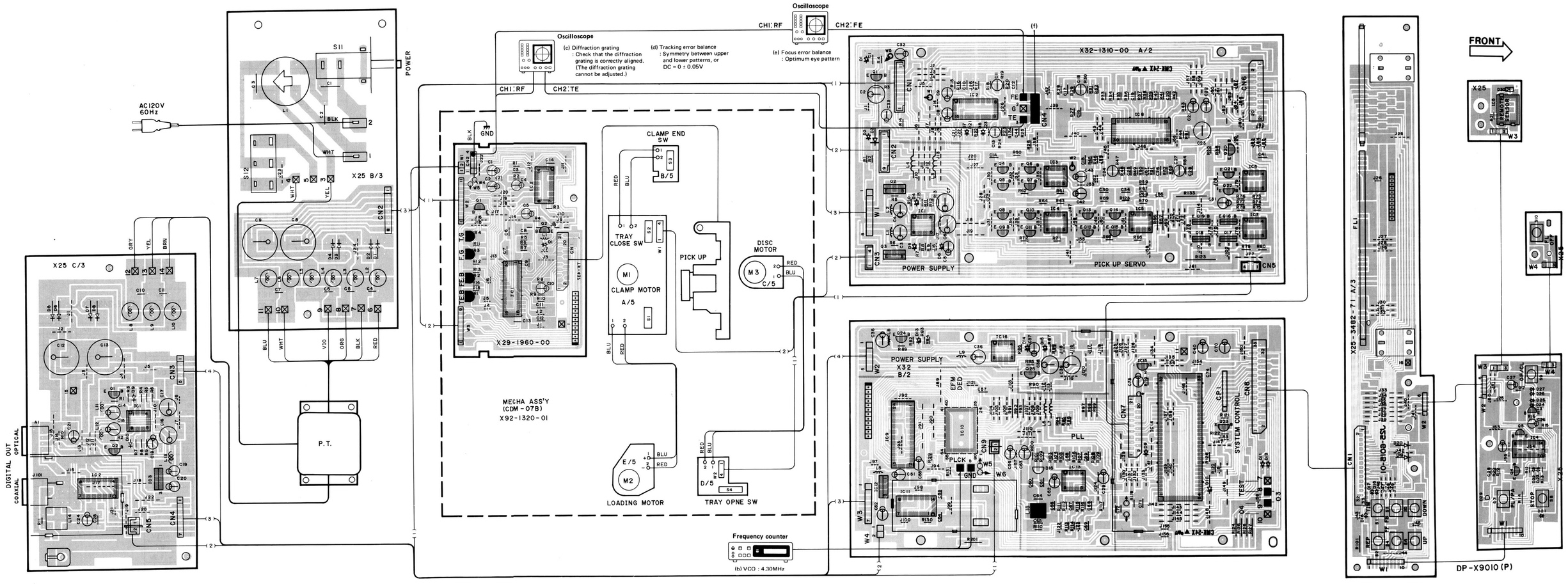

Refer to the schematic diagram for the values of resistors and capacitors.

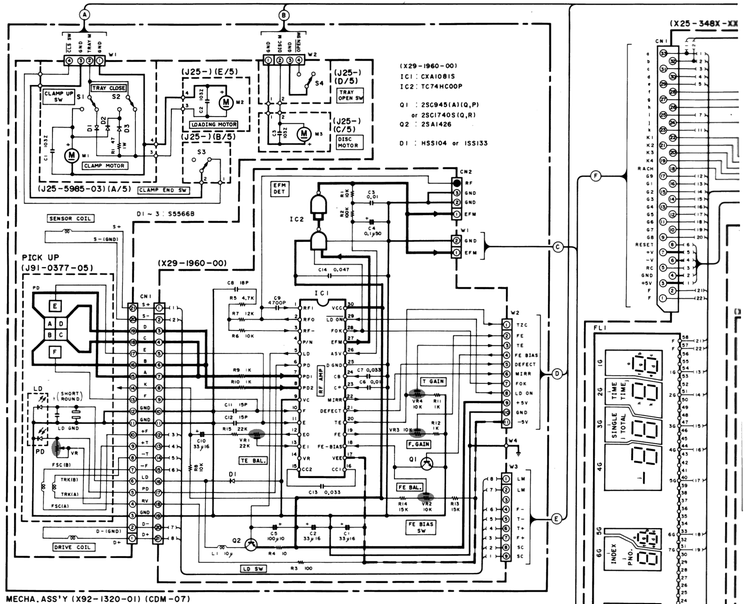

MECHA. ASS'Y (X92-1320-01) (CDM-07)

(X25-3480-00)		(X32-1310-00)	
IC1	NJM4560D or M5218P	IC1, 13, 16	NJM4560D or M5218P
IC2	74AC74PC	IC2	μPD4053BC
IC3	μPC7805HF	IC3 ~ 7	NJM4558D
IC4	TC74HC74P	IC8	CXA1245S
IC5	W02-0975-05	IC9	CXK5816SP-15L
A1	W02-0936-05	IC10	CXD1125Q or CXD1125Q
		IC11	TC74HC04P
Q1, 2	2SC3940A	IC12	μPC7805HF
Q3	2SC1740S(Q,R) or 2SC945(A)(Q,P)	IC14	μPD75212ACW-051
Q4, 5	DTA124EN	IC15	M5195IASL
D1~8	SS566B	Q1	2SA1124A
D9, 10	HZ56.8N(B2) or RD6.8ES(B2)	Q2, 3, 17, 18	2SD1266
D11	HZ55.1N(B2) or RD5.1ES(B2)	Q4, 6, 8, 10, 13, 14, 21	2SA1534A
D16~27	ISS131 or HSS104A	Q16, 19	2SB941
D29	B30-1263-05	Q5, 7, 9, 11, 12, 15, 22, 24, 25	2SC3940A
D30	B30-1012-05	Q20	DTC124EN
FL1	FIP9988M8	Q23, 26	2SC1740S(Q,R) or 2SC945(A1)(Q,P)
		D1	HZ530N(B) or RD30ES(B)
		D2, 10	HZ58.2N(B2) or RD8.2ES(B2)
		D3	SS566B
		D4~6, 13~15	HZ54.7N(B) or RD4.7ES(B)
		D7~9, 11, 12	ISS131 or HSS104A
		D16	ISV147

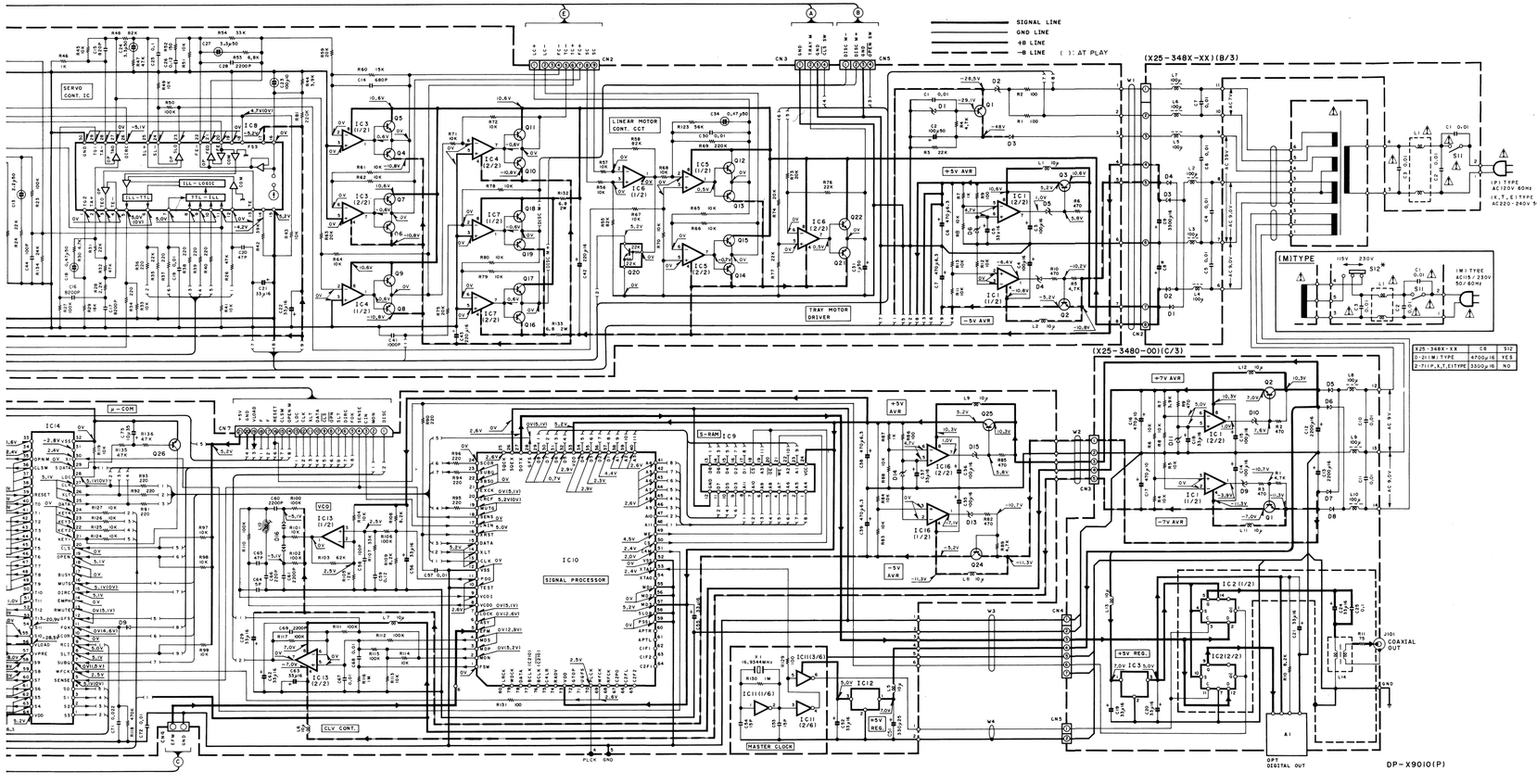

X25-348X-XX	C6	S12
0-2(M)TYPE	4700μ/16	YES
2-7(P,X,T,E)TYPE	3300μ/16	NO

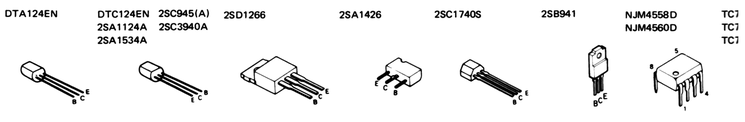

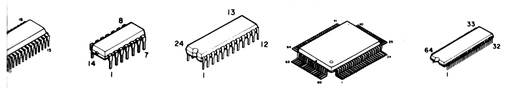

CAUTION: For continued safety, replace safety critical components only with manufacturer's recommended parts (refer to parts list). ⚠Indicates safety critical components. To reduce the risk of electric shock, leakage-current or resistance measurements shall be carried out (exposed parts are acceptably insulated from the supply circuit) before the appliance is returned to the customer.

- DC voltages are as measured with a high impedance voltmeter. Values may vary slightly due to variations between individual instruments or/and units.
- Les tensions c.c. doivent être mesurées avec un voltmètre à haute impédance. Les valeurs peuvent différer légèrement du fait des variations inhérentes aux appareils et aux instruments de mesure individuels.
- Die angegebenen Gleichspannungswerte wurden mit einem hochohmigen Voltmeter gemessen. Dabei schwanken die Meßwerte aufgrund von Unterschieden zwischen einzelnen instrumenten oder Geräten u.U. geringfügig.

Y22-1550-01

EXPLODED VIEW (MECHANISM)

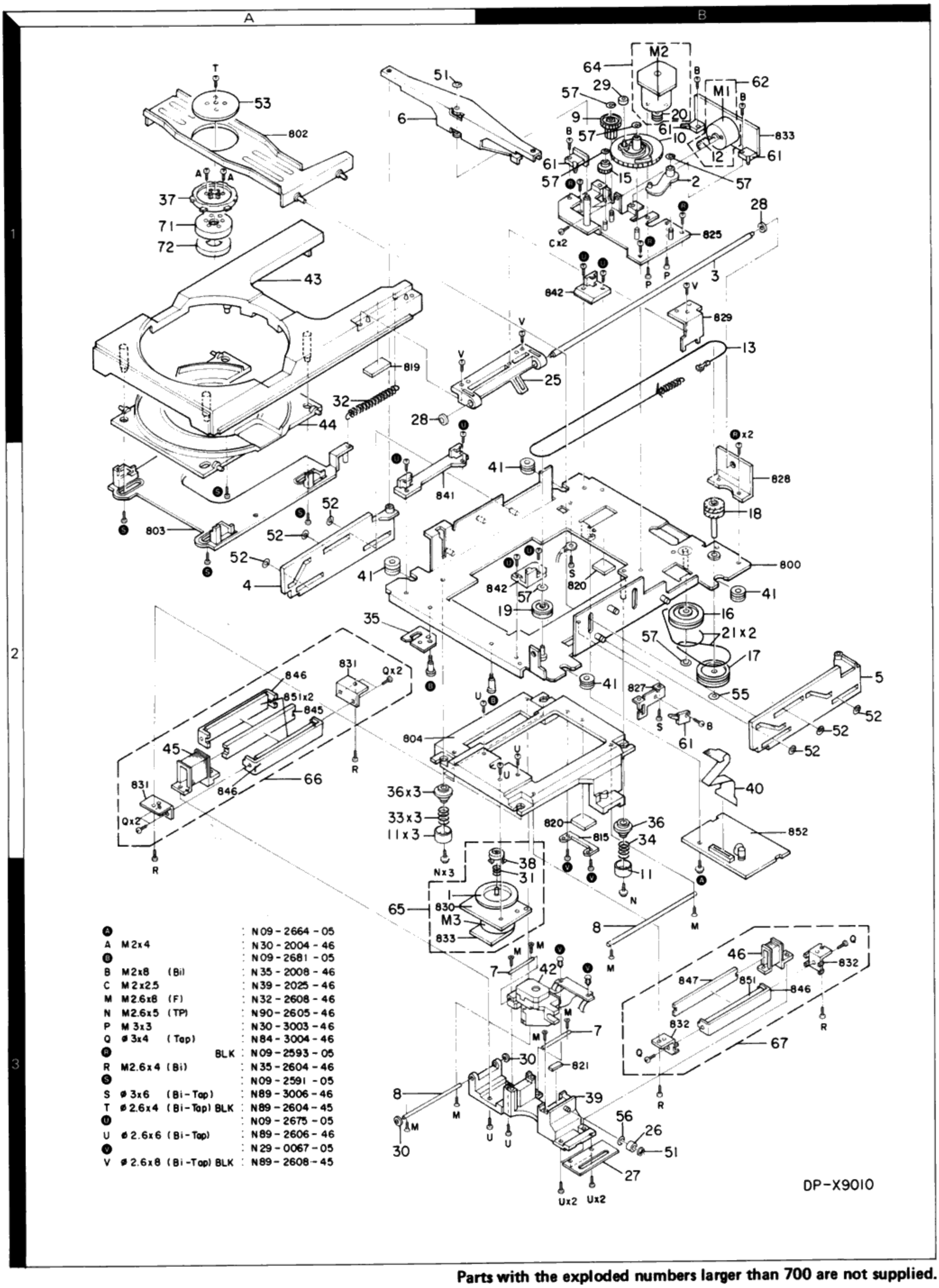

Ⓐ			: N09-2664-05
A	M2x4		: N30-2004-46
Ⓑ			: N09-2681-05
B	M2x8	(Bi)	: N35-2008-46
C	M2x2.5		: N39-2025-46
M	M2.6x8	(F)	: N32-2608-46
N	M2.6x5	(TP)	: N90-2605-46
P	M 3x3		: N30-3003-46
Q	ø3x4	(Tap)	: N84-3004-46
Ⓡ		BLK	: N09-2593-05
R	M2.6x4	(Bi)	: N35-2604-46
Ⓢ			: N09-2591-05
S	ø3x6	(Bi-Tap)	: N89-3006-46
T	ø2.6x4	(Bi-Tap) BLK	: N89-2604-45
Ⓤ			: N09-2675-05
U	ø2.6x6	(Bi-Tap)	: N89-2606-46
Ⓥ			: N29-0067-05
V	ø2.6x8	(Bi-Tap) BLK	: N89-2608-45

Parts with the exploded numbers larger than 700 are not supplied.

EXPLODED VIEW (UNIT)

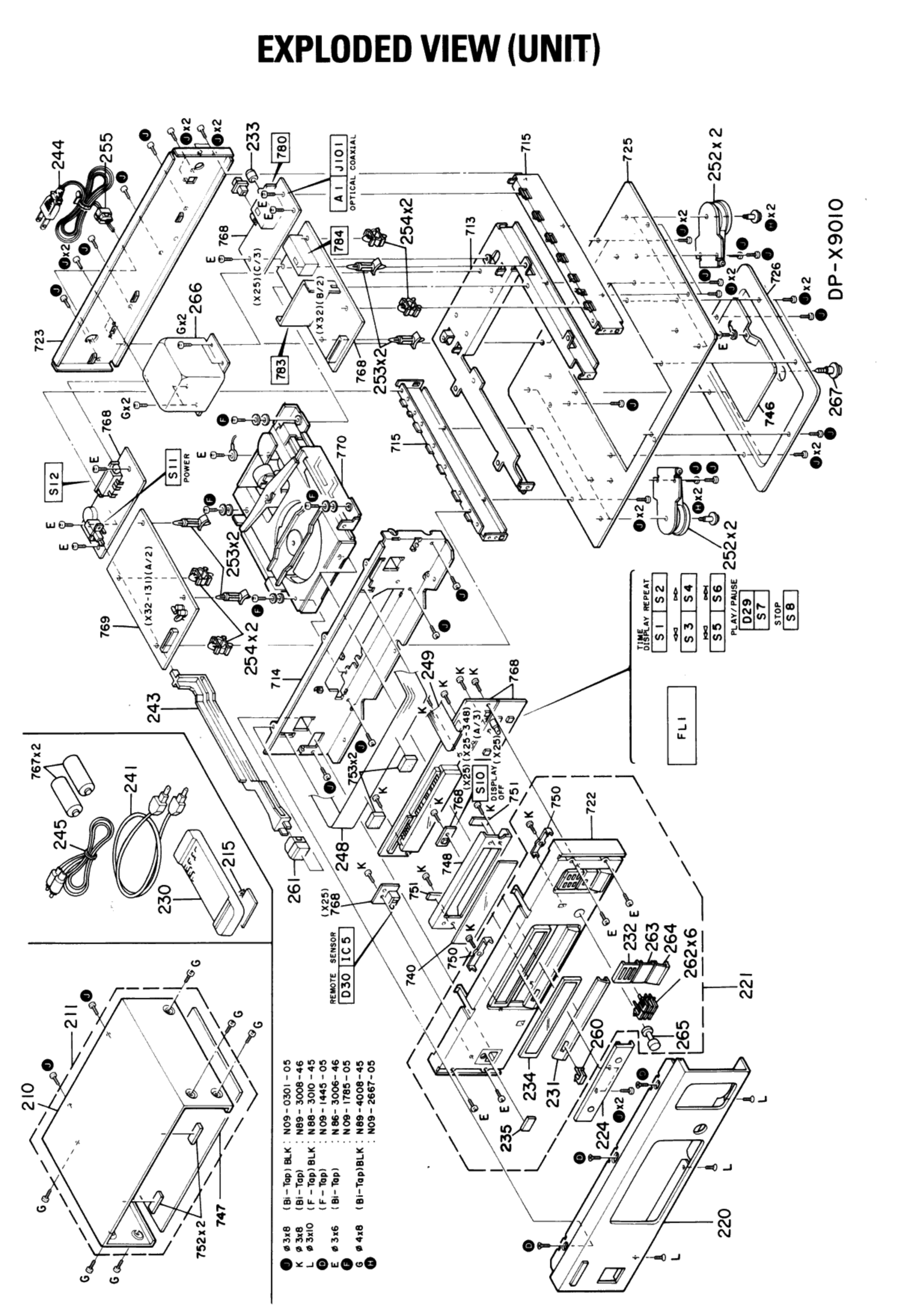

PARTS LIST

* New Parts
Parts without **Parts No.** are not supplied.
Les articles non mentionnes dans le **Parts No.** ne sont pas fournis.
Teile ohne **Parts No.** werden nicht geliefert.

Ref. No. 参照番号	Address 位置	New Parts 新	Parts No. 部品番号	Description 部品名／規格	Destination 仕向	Remarks 備考
			DP-X9010			
210	1C	*	A01-1722-01	METALLIC CABINET		
211	1C	*	A01-1727-12	METALLIC CABINET ASSY		
215	1D		A09-0078-08	BATTERY COVER(REMOTE CONTROL)		
220	2C	*	A20-5689-02	PANEL	PMX	
220	2C	*	A20-5790-02	PANEL	TE	
221	2C	*	A22-1053-02	SUB PANEL ASSY		
224	2C	*	A29-0141-04	PANEL ASSY (TRAY)		
230	1D	*	A70-0252-05	REMOTE CONTROLLER ASSY		
231	2C	*	B03-2504-04	DRESSING PLATE		
232	2C	*	B03-2505-04	DRESSING PLATE		
233	1E		B09-0068-05	CAP		
234	2C	*	B10-0983-04	FRONT GLASS		
235	2C	*	B10-0984-04	FRONT GLASS		
241	1D		B19-0531-05	OPTICAL FIBER ASSY		
-			B46-0096-13	WARRANTY CARD	X	
-			B46-0121-03	WARRANTY CARD	P	
-			B46-0122-13	WARRANTY CARD	E	
-			B46-0143-03	WARRANTY CARD	T	
-		*	B50-9317-00	INSTRUCTION MANUAL		
-		*	B50-9318-00	INSTRUCTION MANUAL	PME	
-		*	B50-9319-00	INSTRUCTION MANUAL	M	
-		*	B50-9381-00	INSTRUCTION MANUAL	E	
-			B58-0400-04	CAUTION CARD		
-			B58-0895-04	CAUTION CARD		
243	1D		D21-1504-03	EXTENSION SHAFT		
⚠ 244	1E		E30-0459-05	AC POWER CORD	E	
⚠ 244	1E		E30-0780-05	AC POWER CORD	P	
⚠ 244	1E		E30-0812-05	AC POWER CORD	M	
⚠ 244	1E		E30-1341-05	AC POWER CORD	X	
⚠ 244	1E		E30-1416-05	AC POWER CORD	T	
245	1D		E30-2350-05	AUDIO CORD		
248	1D	*	E31-4758-05	WIRING HARNESS		
249	1D	*	E31-4859-05	WIRING HARNESS		
-		*	H01-8365-04	ITEM CARTON CASE		
-		*	H10-3751-02	POLYSTYRENE FOAMED FIXTURE		
-		*	H10-3752-02	POLYSTYRENE FOAMED FIXTURE		
-			H20-0554-04	PROTECTION COVER	M	
-			H25-0232-04	PROTECTION BAG (235X350X0.03)		
-			H25-0319-04	PROTECTION BAG	PXTE	
252	2D,2E		J02-0399-05	INSULATOR ASSY		
253	1D,1E		J19-0517-05	UNIT HOLDER		
254	1D,1E	*	J19-2855-15	UNIT HOLDER		
⚠ 255	1E		J42-0083-05	POWER CORD BUSHING		
-			J61-0307-05	WIRE BAND		
260	2C		K29-2648-04	KNOB (DISPLAY OFF)		
261	1D		K29-3363-14	KNOB (POWER)		
262	2C	*	K29-3508-04	KNOB (TIME DISPLAY REPEAT)		
263	2C	*	K29-3509-04	KNOB (PLAY/PAUSE)		
264	2C	*	K29-3510-04	KNOB (STOP)		
265	2C	*	K29-3511-04	KNOB (OPEN/CLOSE)		

E: Scandinavia & Europe **K**: USA **P**: Canada
U: PX(Far East, Hawaii) **T**: England **M**: Other Areas
UE : AAFES(Europe) **X**: Australia

⚠ indicates safety critical components.

PARTS LIST

⁎ New Parts
Parts without **Parts No.** are not supplied.
Les articles non mentionnes dans le **Parts No.** ne sont pas fournis.
Teile ohne **Parts No.** werden nicht geliefert.

Ref. No. 参照番号	Address 位置	New Parts 新	Parts No. 部品番号	Description 部品名／規格	Destination 仕向	Remarks 備考
266	1E	*	L01-5751-05	POWER TRANSFORMER	P	
266	1E	*	L01-5752-05	POWER TRANSFORMER	XTE	
266	1E	*	L01-5754-05	POWER TRANSFORMER	M	
267	2E	*	N09-2649-05	STEPPED SCREW		
D	2C		N09-1445-05	SET SCREW (M3X8)		
F	1D,1E		N09-1785-05	STEPPED SCREW		
H	2D,2E		N09-2667-05	STEPPED SCREW		
J	1E,2E		N09-0301-05	TAPTITE SCREW (3X8)		
OPERATION UNIT (X25-348X-XX) 0-21 : M, 2-71 : P, X, T, E						
D29			B30-1263-05	LED		
D30			B30-1012-05	LED(SLP-981C-50)		
⚠ C1 -3			C91-0647-05	CERAMIC 0.01UF P		
C4 -7			CK45FF1H103Z	CERAMIC 0.010UF Z		
C8			CE04KW1C332M	ELECTRO 3300UF 16WV	PXTE	
C8			CE04KW1C472M	ELECTRO 4700UF 16WV	M	
C9			CE04KW1C332M	ELECTRO 3300UF 16WV		
C10 ,11			CK45FF1H103Z	CERAMIC 0.010UF Z		
C12 ,13			CE04KW1C222M	ELECTRO 2200UF 16WV		
C14 ,15			CE04KW1C101M	ELECTRO 100UF 16WV		
C16 ,17			CE04KW1A471M	ELECTRO 470UF 10WV		
C18 -21			CE04KW1C330M	ELECTRO 33UF 16WV		
C24			CE04KW1C330M	ELECTRO 33UF 16WV		
C25			CF92FV1H104J	MF 0.10UF J		
C26			CE04KW1H4R7M	ELECTRO 4.7UF 50WV		
C27			CE04KW1C330M	ELECTRO 33UF 16WV		
C28			CK45FB1H102K	CERAMIC 1000PF K		
J101			E13-0137-05	PHONO JACK		
⚠ L1			L79-0733-05	LINE FILTER		
L2 -10			L33-0328-05	CHOKE COIL		
L11 -13			L40-1001-17	SMALL FIXED INDUCTOR(10UH,K)		
L14			L39-0152-05	MATCHING COIL		
S1 -10			S40-1064-05	PUSH SWITCH		
⚠ S11	1E		S40-1103-05	PUSH SWITCH (POWER TYPE)		
⚠ S12	1E		S31-2131-05	SLIDE SWITCH (POWER TYPE)	M	
D1 -8			S5566B	DIODE		
D9 ,10			HZS6.8N(B2)	ZENER DIODE		
D9 ,10			RD6.8ES(B2)	ZENER DIODE		
D11			HZS5.1N(B2)	ZENER DIODE		
D11			RD5.1ES(B2)	ZENER DIODE		
D16 -27			HSS104A	DIODE		
D16 -27			1SS131	DIODE		
FL1	2D	*	FIP9BBM8	FLUORESCENT INDICATOR TUBE		
IC1			M5218P	IC(OP AMP X2)		
IC1			NJM4560D	IC(OP AMP X2)		
IC2			74AC74PC	IC(D-FLIP FLOP)		
IC3			UPC7805HF	IC(VOLTAGE REGULATOR/ +5V)		
IC4			TC74HC74P	IC(D-FLIP FLOP)		
Q1 ,2			2SC3940A	TRANSISTOR		
Q3			2SC1740S(Q,R)	TRANSISTOR		
Q3			2SC945(A)(Q,P)	TRANSISTOR		
Q4 ,5			DTA124EN	DIGITAL TRANSISTOR		
A1			W02-0936-05	TRANSMITTING ASSY		

E: Scandinavia & Europe **K**: USA **P**: Canada
U: PX(Far East, Hawaii) **T**: England **M**: Other Areas
UE : AAFES(Europe) **X**: Australia

⚠ indicates safety critical components.

PARTS LIST

⁎ New Parts
Parts without **Parts No.** are not supplied.
Les articles non mentionnes dans le **Parts No.** ne sont pas fournis.
Teile ohne **Parts No.** werden nicht geliefert.

Ref. No. 参照番号	Address 位置	New Parts 新	Parts No. 部品番号	Description 部品名／規格	Destination 仕向	Remarks 備考
IC5	1C		W02-0975-05	ELECTRIC CIRCUIT MODULE		
CONTROL CIRCUIT UNIT (X29-1960-00)						
C1 ,2			CE04KW1C330M	ELECTRO 33UF 16WV		
C3			CK45FF1H103Z	CERAMIC 0.010UF Z		
C4			CE04KW1H0R1M	ELECTRO 0.1UF 50WV		
C5			CE04KW1A101M	ELECTRO 100UF 10WV		
C6			CF92FV1H103J	MF 0.010UF J		
C7			CF92FV1H333J	MF 0.033UF J		
C8			CC45FSL1H180J	CERAMIC 18PF J		
C9			CF92FV1H472J	MF 4700PF J		
C10			CE04KW1C330M	ELECTRO 33UF 16WV		
C11 ,12			CC45FSL1H150J	CERAMIC 15PF J		
C13			CF92FV1H333J	MF 0.033UF J		
C14			CK45FF1H473Z	CERAMIC 0.047UF Z		
CN1			E10-2103-05	FLAT CABLE CONNECTOR		
-			J61-0019-05	WIRE BAND		
L1			L40-1001-17	SMALL FIXED INDUCTOR(10UH,K)		
VR1			R12-3128-05	TRIMMING POT.(22K)TE BAL.		
VR2 -4			R12-3126-05	TRIMMING POT.(10K)FE BAL.		
D1			HSS104	DIODE		
D1			1SS133	DIODE		
IC1			CXA1081S	IC(RF AMP)		
IC2			TC74HC00P	IC(QUAD 2-INPUT NAND GATE)		
Q1			2SC1740S(Q,R)	TRANSISTOR		
Q1			2SC945(A)(Q,P)	TRANSISTOR		
Q2			2SA1426	TRANSISTOR		
CD PLAYER UNIT (X32-1310-00)						
C1			CK45FF1H103Z	CERAMIC 0.010UF Z		
C2			CE04KW1H101M	ELECTRO 100UF 50WV		
C3 ,4			CE04KW1C101M	ELECTRO 100UF 16WV		
C5			CE04KW1C330M	ELECTRO 33UF 16WV		
C6 ,7			CE04KW0J471M	ELECTRO 470UF 6.3WV		
C8 ,9			CE04KW1C330M	ELECTRO 33UF 16WV		
C10			CF92FV1H104J	MF 0.10UF J		
C11			C90-1350-05	NP-ELEC 2.2UF 50WV		
C12			CC45FSL1H101J	CERAMIC 100PF J		
C13			C90-1350-05	NP-ELEC 2.2UF 50WV		
C14			CF92FV1H681J	MF 680PF J		
C15			CK45FB1H821K	CERAMIC 820PF K		
C16 ,17			CF92FV1H822J	MF 8200PF J		
C18			C90-1331-05	NP-ELEC 0.47UF 50WV		
C19			CF92FV1H103J	MF 0.010UF J		
C20			CC45FSL1H470J	CERAMIC 47PF J		
C21 ,22			CE04KW1C330M	ELECTRO 33UF 16WV		
C23			C90-1443-05	NP-ELEC 100UF 10WV		
C24			C90-1351-05	NP-ELEC 3.3UF 50WV		
C25			CF92FV1H104J	MF 0.10UF J		
C26			CF92FV1H124J	MF 0.12UF J		
C27			C90-1351-05	NP-ELEC 3.3UF 50WV		
C28			CF92FV1H222J	MF 2200PF J		
C29			CE04KW1C330M	ELECTRO 33UF 16WV		

E: Scandinavia & Europe **K**: USA **P**: Canada
U: PX(Far East, Hawaii) **T**: England **M**: Other Areas
UE : AAFES(Europe) **X**: Australia

⚠ indicates safety critical components.

PARTS LIST

* New Parts
Parts without **Parts No.** are not supplied.
Les articles non mentionnes dans le **Parts No.** ne sont pas fournis.
Telle ohne **Parts No.** werden nicht geliefert.

Ref. No. 参照番号	Address 位置	New Parts 新	Parts No. 部品番号	Description 部品名／規格	Destination 仕向	Remarks 備考
C30			CF92FV1H103J	MF 0.010UF J		
C31			CE04KW1H010M	ELECTRO 1.0UF 50WV		
C32 ,33			CE04KW0J471M	ELECTRO 470UF 6.3WV		
C34			C90-1331-05	NP-ELEC 0.47UF 50WV		
C35 ,36			CE04KW1C101M	ELECTRO 100UF 16WV		
C37			CE04KW1C330M	ELECTRO 33UF 16WV		
C38 ,39			CE04KW0J471M	ELECTRO 470UF 6.3WV		
C40			CE04KW1C330M	ELECTRO 33UF 16WV		
C41			CK45FB1H102K	CERAMIC 1000PF K		
C42 ,43			CE04KW1C221M	ELECTRO 220UF 16WV		
C44			CC45FSL1H101J	CERAMIC 100PF J		
C51			CE04KW1E331M	ELECTRO 330UF 25WV		
C52			CE04KW1C330M	ELECTRO 33UF 16WV		
C53 ,54			C91-0980-05	CERAMIC 15PF G		
C55 ,56			CE04KW1C330M	ELECTRO 33UF 16WV		
C57			CK45FF1H103Z	CERAMIC 0.010UF Z		
C58			CC45FSL1H101J	CERAMIC 100PF J		
C59			CF92FV1H124J	MF 0.12UF J		
C60 ,61			CK45FB1H222K	CERAMIC 2200PF K		
C62 ,63			CE04KW1C330M	ELECTRO 33UF 16WV		
C64			CC45FUJ1H050C	CERAMIC 5.0PF C		
C65		*	CC45FUJ1H470J	CERAMIC 47PF J		
C66			CC45FUJ1H221J	CERAMIC 220PF J		
C67 ,68			CK45FF1H103Z	CERAMIC 0.010UF Z		
C69			CF92FV1H222J	MF 2200PF J		
C70			CE04KW1C330M	ELECTRO 33UF 16WV		
C71			CF92FV1H223J	MF 0.022UF J		
C72			CK45FF1H103Z	CERAMIC 0.010UF Z		
C73			CE04KW0J471M	ELECTRO 470UF 6.3WV		
C74			CK45FF1H103Z	CERAMIC 0.010UF Z		
C75			CE04KW1V100M	ELECTRO 10UF 35WV		
L1 ,2			L40-1001-17	SMALL FIXED INDUCTOR(10UH,K)		
L3 ,4		*	L40-2291-17	SMALL FIXED INDUCTOR		
L5 -9			L40-1001-17	SMALL FIXED INDUCTOR(10UH,K)		
L10			L32-0328-15	OSCILATING COIL (VCO)		
X1			L77-1159-05	CRYSTAL RESONATOR		
CP1			R90-0493-05	MULTI-COMP 100KX9 J 1/6W		
R130			RN14BK2C1004F	RN 1.00M F 1/6W		
R132,133			RS14KB3D6R8J	FL-PROOF RS 6.8 J 2W		
D1			HZS30N(B)	ZENER DIODE		
D1			RD30ES(B)	ZENER DIODE		
D2			HZS8.2N(B2)	ZENER DIODE		
D2			RD8.2ES(B2)	ZENER DIODE		
D3			S5566B	DIODE		
D4 -6			HZS4.7N(B)	ZENER DIODE		
D4 -6			RD4.7ES(B)	ZENER DIODE		
D7 -9			HSS104A	DIODE		
D7 -9			1SS131	DIODE		
D10			HZS8.2N(B2)	ZENER DIODE		
D10			RD8.2ES(B2)	ZENER DIODE		
D11 ,12			HSS104A	DIODE		
D11 ,12			1SS131	DIODE		
D13 -15			HZS4.7N(B)	ZENER DIODE		
D13 -15			RD4.7ES(B)	ZENER DIODE		

E: Scandinavia & Europe **K**: USA **P**: Canada
U: PX(Far East, Hawaii) **T**: England **M**: Other Areas
UE : AAFES(Europe) **X**: Australia

⚠ indicates safety critical components.

PARTS LIST

⁎ New Parts
Parts without **Parts No.** are not supplied.
Les articles non mentionnes dans le **Parts No.** ne sont pas fournis.
Teile ohne **Parts No.** werden nicht geliefert.

Ref. No. 参照番号	Address 位置	New Parts 新	Parts No. 部品番号	Description 部品名／規格	Destination 仕向	Remarks 備考
D16			1SV147	VARISTOR		
IC1			M5218P	IC(OP AMP X2)		
IC1			NJM4560D	IC(OP AMP X2)		
IC2			UPD4053BC	IC(3-INPUT 2CH MPX/DE-MPX)		
IC3 -7			NJM4558D	IC(OP AMP X2)		
IC8			CXA1244S	IC(SERVO SIGNAL PROCESSOR)		
IC9			CXK5816SP-15L	IC(2KX8 RAM)		
IC10			CXD1125Q	IC(DIGITAL SIGNAL PROCESSOR)		
IC10			CXD1125QZ	IC(DIGITAL SIGNAL PROCESSOR)		
IC11			TC74HC04P	IC(HEX INVERTER)		
IC12			UPC7805HF	IC(VOLTAGE REGULATOR/ +5V)		
IC13			M5218P	IC(OP AMP X2)		
IC13			NJM4560D	IC(OP AMP X2)		
IC14			UPD75212ACW-051	IC(MICROPROCESSOR)		
IC15			M51951ASL	IC(SYSTEM RESET)		
IC16			M5218P	IC(OP AMP X2)		
IC16			NJM4560D	IC(OP AMP X2)		
Q1			2SA1124A	TRANSISTOR		
Q2 ,3			2SD1266	TRANSISTOR		
Q4			2SA1534A	TRANSISTOR		
Q5			2SC3940A	TRANSISTOR		
Q6			2SA1534A	TRANSISTOR		
Q7			2SC3940A	TRANSISTOR		
Q8			2SA1534A	TRANSISTOR		
Q9			2SC3940A	TRANSISTOR		
Q10			2SA1534A	TRANSISTOR		
Q11 ,12			2SC3940A	TRANSISTOR		
Q13 ,14			2SA1534A	TRANSISTOR		
Q15			2SC3940A	TRANSISTOR		
Q16			2SB941	TRANSISTOR		
Q17 ,18			2SD1266	TRANSISTOR		
Q19			2SB941	TRANSISTOR		
Q20			DTC124EN	DIGITAL TRANSISTOR		
Q21			2SA1534A	TRANSISTOR		
Q22			2SC3940A	TRANSISTOR		
Q23			2SC1740S(Q,R)	TRANSISTOR		
Q23			2SC945(A)(Q,P)	TRANSISTOR		
Q24 ,25			2SC3940A	TRANSISTOR		
Q26			2SC1740S(Q,R)	TRANSISTOR		
Q26			2SC945(A)(Q,P)	TRANSISTOR		
MECHANISM ASS'Y (X92-1320-01)						
11	2A,3B		B09-0088-04	CAP		
C1			CK45FF1H103Z	CERAMIC 0.010UF Z		
C2			C91-0769-05	CERAMIC 0.01UF M		
C3			CK45FF1H103Z	CERAMIC 0.010UF Z		
1	3A		D02-0085-04	TURNTABLE PLATTER		
2	1B		D10-2231-04	ARM ASSY		
3	1B		D10-2233-04	ROD		
4	2A		D10-2234-03	SLIDER (L,CLAMP)		
5	2B		D10-2235-03	SLIDER (R,CLAMP)		
6	1A		D10-2237-03	ARM (CLAMP)		
7	3B		D10-2238-04	ROD		
8	3A,3B		D10-2270-04	ROD		
9	1B		D13-0725-04	GEAR (HELICAL)		

E: Scandinavia & Europe **K**: USA **P**: Canada
U: PX(Far East, Hawaii) **T**: England **M**: Other Areas
UE : AAFES(Europe) **X**: Australia

⚠ indicates safety critical components.

PARTS LIST

⁎ New Parts
Parts without **Parts No.** are not supplied.
Les articles non mentionnes dans le **Parts No.** ne sont pas fournis.
Teile ohne **Parts No.** werden nicht geliefert.

Ref. No. 参照番号	Address 位置	New Parts 新	Parts No. 部品番号	Description 部品名／規格	Destination 仕向	Remarks 備考
10	1B		D13-0726-03	GEAR (MAIN)		
12	1B		D13-0743-04	WORM		
13	1B	*	D19-0253-14	WIRE (WITH SPRING)		
15	1B		D13-0744-04	GEAR		
16	2B		D15-0285-04	PULLEY (A)		
17	2B		D15-0286-04	PULLEY (B1)		
18	2B		D15-0287-04	PULLEY (B2)		
19	2B		D15-0288-04	PULLEY (C)		
20	1B		D15-0289-04	MOTOR PULLEY		
21	2B		D16-0192-04	BELT		
25	1B		D23-0237-04	RETAINER		
26	3B		D23-0238-05	RETAINER		
27	3B		D32-0177-04	STOPPER		
28	1A,1B		G11-1302-04	CUSHION (ROD)		
29	1B		G11-1321-14	CUSHION		
30	3A,3B	*	G11-1322-14	CUSHION		
31	3B		G01-2105-04	COMPRESSION SPRING		
32	1A		G01-2281-04	EXTENSION SPRING		
33	2A		G01-2282-04	COMPRESSION SPRING(A)		
34	2B		G01-2283-04	COMPRESSION SPRING(B,BLACK)		
35	2A	*	J19-3119-04	HOLDER		
36	2A,2B		J02-0192-05	INSULATOR		
37	1A		J11-0137-03	CLAMPER		
38	3B		J19-2874-04	HOLDER (TURNTABLE)		
39	3B		J19-3058-05	HOLDER		
40	2B		J25-6074-05	PRINTED WIRING BOARD ASSY		
41	2A,2B		J42-0165-04	BUSHING		
42	3B		J91-0377-05	PICKUP		
43	1A		J99-0056-01	TRAY (A)		
44	1A		J99-0058-02	TRAY (B)		
–			J61-0019-05	WIRE BAND		
45	2A		L90-0015-08	COIL		
46	3B	*	L90-0016-08	COIL		
51	1A,3B		N19-0891-04	FLAT WASHER		
52	2A,2B		N19-0921-04	FLAT WASHER		
53	1A		N19-0945-04	FLAT WASHER		
55	2B		N19-1212-04	FLAT WASHER		
56	3B		N19-0143-04	FLAT WASHER		
57	1B,2B		N19-1211-04	FLAT WASHER		
A	3B		N09-2664-05	STEPPED SCREW		
B	2A,2B		N09-2681-05	STEPPED SCREW		
R	1B,2B		N09-2593-05	TAPTITE SCREW		
S	2A		N09-2591-05	TAPTITE SCREW		
U	1B,2B		N09-2675-05	TAPTITE SCREW		
V	3B		N29-0067-05	PUSH RIVET (3.5X4.5)		
R1			RS14KB3A470J	FL-PROOF RS 47 J 1W		
61	1B,2B		S33-1017-05	LEVER SWITCH		
62	1B		T42-0485-04	MOTOR ASSY (CLAMP)		
64	1B		T42-0498-04	MOTOR ASSY (LOADING)		
65	3A		T42-0499-14	MOTOR ASSY (DISC)		
66	2A	*	T50-1037-15	YOKE ASSY		

E: Scandinavia & Europe **K**: USA **P**: Canada
U: PX(Far East, Hawaii) **T**: England **M**: Other Areas
UE : AAFES(Europe) **X**: Australia

⚠ indicates safety critical components.

PARTS LIST

* New Parts
Parts without **Parts No.** are not supplied.
Les articles non mentionnes dans le **Parts No.** ne sont pas fournis.
Teile ohne **Parts No.** werden nicht geliefert.

Ref. No. 参照番号	Address 位置	New Parts 新	Parts No. 部品番号	Description 部品名／規格	Destination 仕向	Remarks 備考
67	3B	*	T50-1038-15	YOKE ASSY		
71	1A	*	T50-1041-04	YOKE		
72	1A		T99-0222-05	MAGNET		
M1	1B		T42-0439-05	DC MOTOR (CLAMP MOTOR)		
M2	1B	*	T42-0486-05	DC MOTOR (LOADING MOTOR)		
M3	3A		T42-0496-05	DC MOTOR (DISC MOTOR)		
D1 -D3			S5566B	DIODE		

E: Scandinavia & Europe K: USA P: Canada
U: PX(Far East, Hawaii) T: England M: Other Areas
UE : AAFES(Europe) X: Australia

⚠ indicates safety critical components.

SPECIFICATIONS

[Format]

Type: ..... Compact disc player
Read system: ..... Non-contact optical pickup
Rotational speed: ..... About 200 to 500 rpm

[Output]

DIGITAL (COAXIAL): ..... 0.5 Vp-p 75 ohms
DIGITAL (OPTICAL): ..... −15 ~ −21 dBm

[Power supply General]

Power consumption: ..... 20 W
Maximum dimensions: ..... W: 440 mm (17-15/16 ˝)
H: 132 mm (5-3/16 ˝)
D: 361 mm (14-3/16 ˝)
Weight: ..... 10.0 kg (22 lb)

[Wireless remote control unit]

Model: RC-PX9010
Type: ..... Infrared pulse
Power supply: ..... DC 3 V (two R6/AA batteries)
Maximum dimensions: ..... W: 64 mm (2-1/2 ˝)
H: 18 mm (11/16 ˝)
D: 176 mm (6-15/16 ˝)
Weight: ..... 121 g (with batteries) (0.267 lb)

Downloaded from www.hifiengine.com

Note:
KENWOOD follows a policy of continuous development. For this reason specifications may be changed without notice.

Note :
Component and circuitry are subject to modification to insure best operation under differing local conditions. This manual is based on, the Canada (P) standard, and provides information on regional circuit modification through use of alternate schematic diagrams, and information on regional component variations through use of parts list.

KENWOOD CORPORATION
Shiorogi Shibuya Building, 17-5, 2-chome Shibuya, Shibuya-ku, Tokyo 150, Japan

KENWOOD U.S.A. CORPORATION
2201 East Dominguez Street, Long Beach, CA 90810.
550 Clark Drive, Mount Olive, NJ 07828, U.S.A.

KENWOOD ELECTRONICS CANADA INC.
P.O. Box 1075 959 Gana Court, Mississauga, Ontario, Canada L4T 4C2

KENWOOD ELECTRONICS BENELUX N.V.
Mechelsesteenweg 418 B-1930 Zaventem, Belgium

KENWOOD ELECTRONICS DEUTSCHLAND GMBH
Rembrucker-Str. 15, 6056 Heusenstamm, West Germany

TRIO-KENWOOD FRANCE S.A.
Hi-Fi·VIDEO·CAR Hi-Fi
13, Boulevard Ney, 75018 Paris, France

TRIO-KENWOOD U.K. LTD.
17 Bristol Road, The Metropolitan Centre, Greenford, Middx. UB6 8UP England

KENWOOD ELECTRONICS AUSTRALIA PTY. LTD.
4E Woodcock Place, Lane Cove, N.S.W. 2066, Australia

KENWOOD & LEE ELECTRONICS, LTD.
Wang Kee Building, 4th Floor, 34-37, Connaught Road, Central, Hong Kong